产品名称

Øutdoor防水光束传感器
型号 ABT
工作电压 13.8〜24VDC〜11 28VAC
工作电流 40-65mA
指示速度 50〜700米/秒
防拆输出 NC
环境温度 -20℃〜+ 50℃
报警输出 NO / NC
水平调整 180°±90°
Vertocal调整 ±10°
颜色 黑色
材料 PC树脂

PRODUCT PICTURE

•Dimension

SMQT

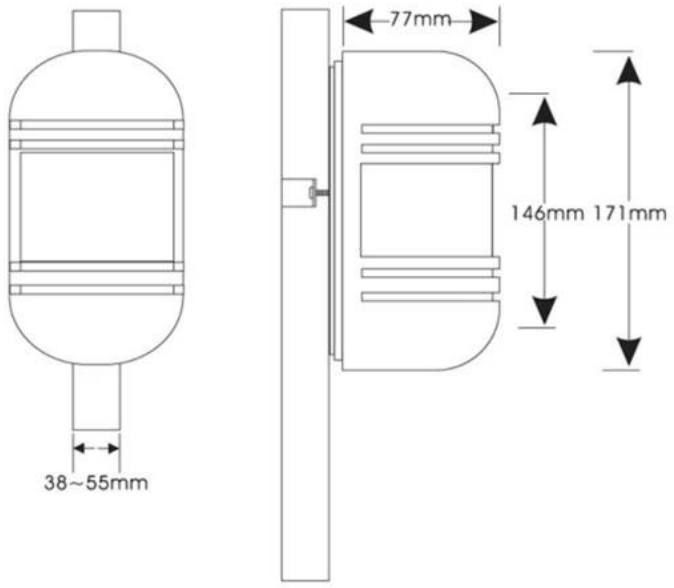

•Feature

SMQT

PRODUCT FEATURE

Sealed integration structure is able to work inthe has enviroment

Automtically regulate to confranted with fog or inclement weathe

Sensitivity(AGC circuit)

easily adjust and calibrate the horizontal/vertical optional angle

Built -in integrate optical telescopes, anti-jamming jacket

Anti-lighting circuit designed

High-power infrared receiver on the tubes,low-power digital

• *Packaging & shipping*

SMQT

• *Office show*

SMQT

• *Exhibition*

SMQT

2011 Brazil Fair
2012 Shenyang Fair
2013 Jinan Fair
2013 Shenzhen Fair
共赢
.....
2012 Shenyang Fair
2013 Shenyang Fair
2013 Shenzhen Fair
2015 Shenzhen Fair