Parameter

SMQT

□□	ABE
□□□□	□□□150□300□450□600□750□ □□□50□□□150□200□250□□□□□
□□□□	13.8□24VDC□11 28VAC
□□□□	40-65mA
□□□□	50□700□/□
□□□□	NC
□□□□	-20℃□+ 50℃
□□□□	NO / NC
□□□□	180°±90°
Vertocal□□	±10°
□□	□□
□□	PC□□

Introduction

SMQT

□□□□□□□□□□□3□□□□□□□□□□□□□□□□□□□□
□□□□□□□□□□□□□□□□□□□□□□□□□□□□□□□
□□□□□□□□□□□□□□□□□□□□
□□□□□□□□□□□□□□□□□□□□□□□□AGC□□□□
□□□□□□□□□/□□□□□□□
□□□□□□□□□□□□□□□□□□□□
□□□□□□□□
□□□□□□□□□□□□□□□

inside zone of the sensor

inside of the sensor

3 beams sensor

pairs of the sensor

Dimesion Picture

SMQT

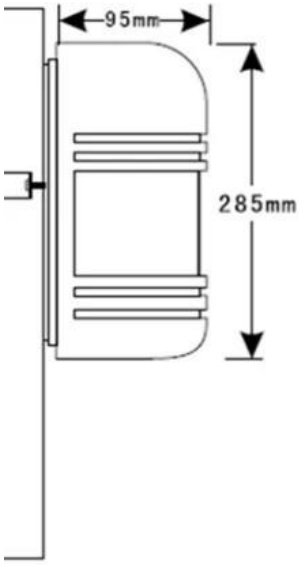

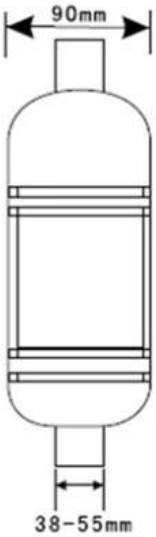

Installations

SMQT

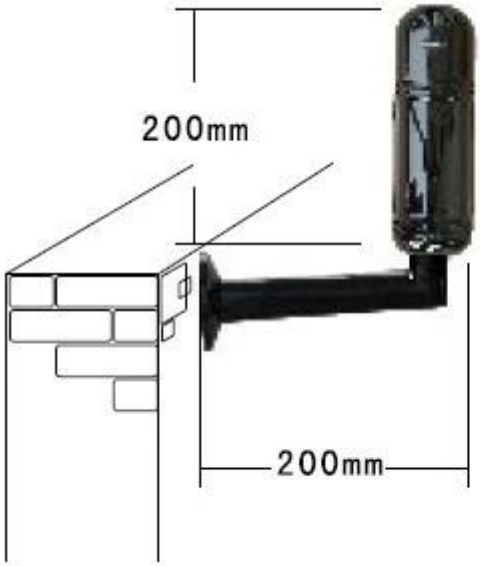

Optional Bracket Accessories:

T Bracket

T-200 200×120mm

T-100 100×120mm

L Bracket

80×75mm

I Bracket

I-100 100mm

I-200 200mm

Features

SMQT

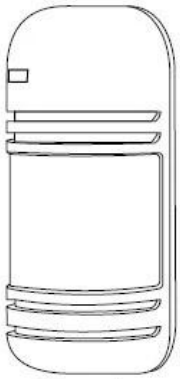

Housing

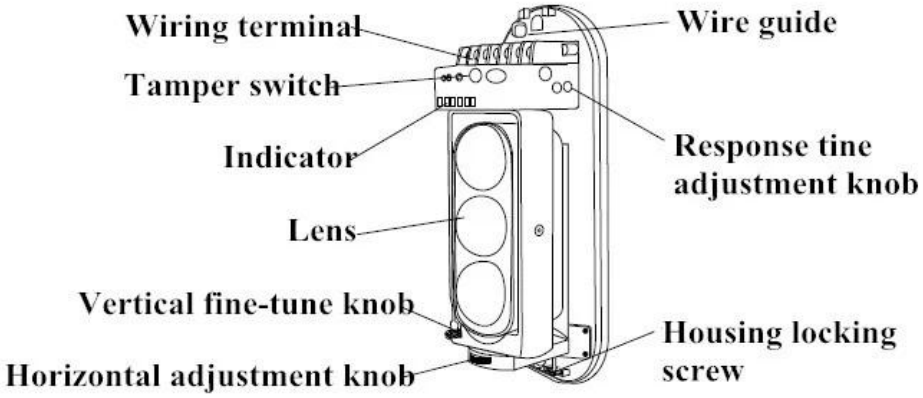

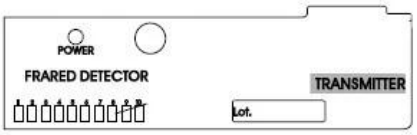

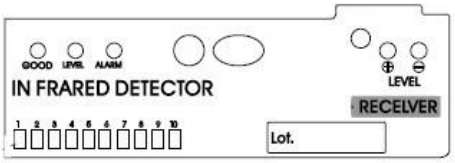

Office

SMQT

Exhibitions

SMQT

2011 Brazil Fair
2012 Shenyang Fair
2013 Jinan Fair
2013 Shenzhen Fair
共赢
.....
2012 Shenyang Fair
2013 Shenyang Fair
2013 Shenzhen Fair
2015 Shenzhen Fair