# High quality waterproof laser beam outdoor/indoor active infrared 4 beams detector

## Product Description

| Specification | |
|---|---|
| Name | High quality waterproof laser beam outdoor/indoor active infrared 4 beams detector |
| Model | ABH |
| Detecting distance | Indoor :150m 300m 450m 600m 750m<br>Outdoor:50m 100m 150m 200m 250m(optional) |
| Operating voltage | 13.8~24VDC 11~28VAC |
| Operating current | 40-65mA |
| Indication speed | 50~700m/sec |
| Anti-demolition output | NC |
| Environment temperature | -20℃~+50℃ |
| Alarm output | NO/NC |
| Level adjustment | 180°±90° |
| Vertocal adjustment | ±10° |
| Color | Black |
| Material | PC resin |

**Product Feature**

## what features of our waterproof laser beam outdoor/indoor active infrared 4 beams detector?

1.4 beams waterproof infrared perimeter barrier detector

2.4 detecting distance (100m,150m,200m 250m)optional

3.Anti-jamming jacket, Anti-lightning circuit designed

4.Suitable for  hash environment

5.2 years warranty , welcome OEM

## Product Display

### IN-KIND SHOOTING

**Application**

## APPLICATION

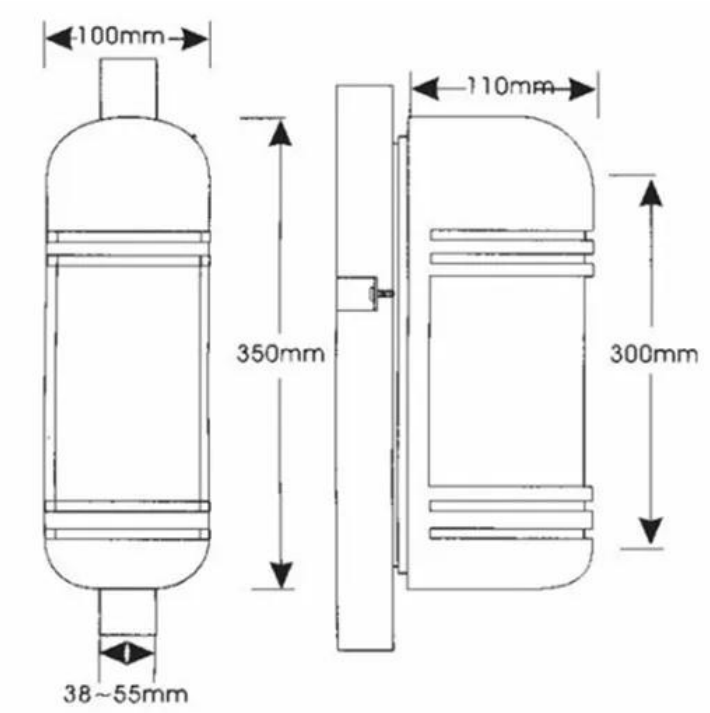

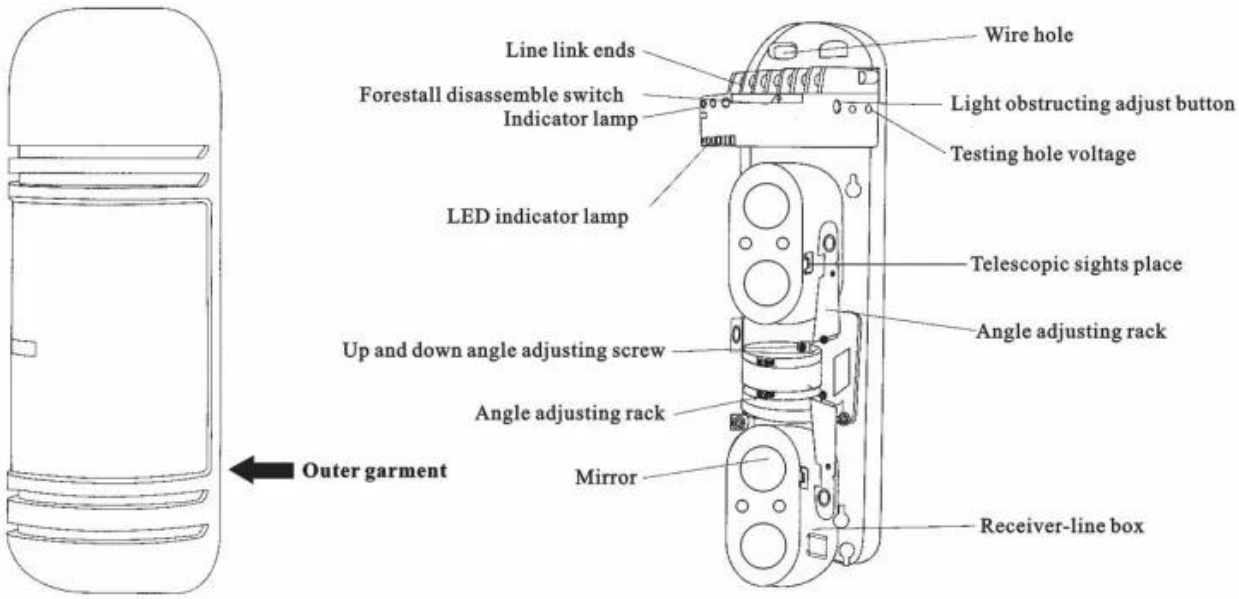


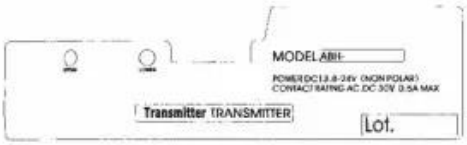


- When UPPER light beam projection lights a lamp instructs
- When LOWER lower segment light beam projection lights a lamp instructs

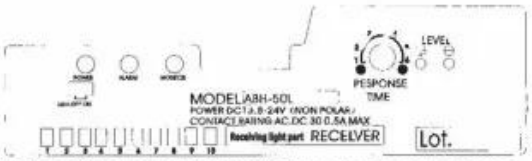


- Power(The power light) puts through the power source, the indicating lamp is bright.
- ALARM(ALRAM indicator) alarming lamp light
- MONITOR(Adjust indicator)The optical axis aims when the green light is bright, the optical axis does not aim when the red candle is bright.

Fast walk: 1

General walk (6.9m/s):2

Rapid walk

General walk

Slow walk

## Show Cases

# SHOW CASES

## Company Information

## OFFICE SHOW

## CUSTOMERS

## EXHIBITION

## CERTIFICATION

**Our Services**

## HOW TO COOPERATE

**FAQ**

## Q:Can I have a sample order?

**A:Yes, we are willing to offer trial sample order to you for quality test. Mixed samples are acceptable.**

## Q:What is the lead time?

**A:Sample needs 1-3 working days, mass production time needs 10-15 working days.**

**Q:What is your MOQ?**

**A:No MOQ limit.The more quantity the more discounts.**

**Q:How do you ship the goods and how long does it take arrive?**

**A:The sample will be sent to you by optional shipping service (couriers, air, and sea),or appointed by buyer,7-15 days.**

**Q:How will we proceed the order if I have logo to print?**

**A:Firstly, we will prepare artwork for visual confirmation. If the color and position are right, we would make sampling firstly from silk print factory and take picture for your second confirmation before mass production.**

***How to contact us?***
***Click the enter send us inquiry below.***