What specifications of our EA-81k?

Specification	
Model	EA-81k
Dimension	120×75×25(mm)
Working voltage	12V DC
Working current	<100mA
Cards capacity	1000pcs, 16000 or 32000 is customized
Inducation range	30-70mm
Card type	ID & IC card
Suit for	home/ office
Reacting time	<0.5s
Working temperature	-35 ℃~70 ℃

What features of our EA-81k?

- 1,000 cards capacity, 16,000 or 32,000 be customized
- Support ID 125KHz & IC 13.56MHz
- 30mm-70mm reading distance
- Wecome to test sample for evaluation
- Welcome 2 years warranty & OEM

IN-KIND SHOOTING

HOW TO USE IT?

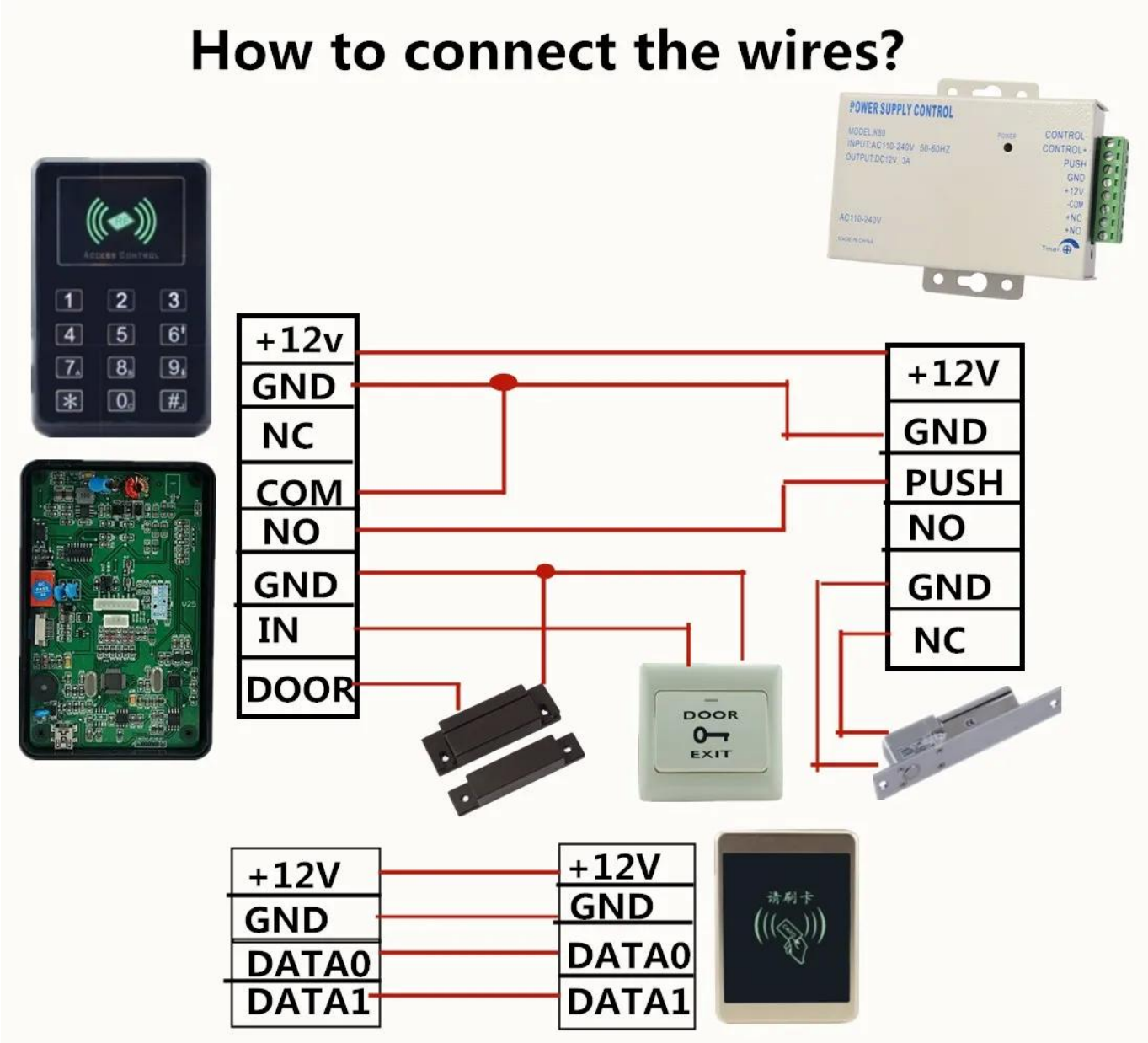

Buyer feedback

Order Number: 77851351216448	Last update Time: 2016-09-05 07:19	fobister
Trade Assurance coverage	On-time shipment safeguard	Post-delivery product quality safeguard
Buyer feedback	thank you for your support , pls keep the quality and best service , we will do more business together in the future !	

Order Number: 77851671126448	Last update Time: 2016-09-05 07:17	fobister
Trade Assurance coverage	On-time shipment safeguard	Post-delivery product quality safeguard
Buyer feedback	thank your for your support , pls keep the quality and best service .	

HOW ABOUT MORE CHOICE?

PACKING AND SHIPPING

VARIETY OF
PAYMENT OPTIONS
T/T
L/C
30/70
AT SIGHT/90DAY
WESTERN UNION WU
moving money for better
PayPal
VISA
MasterCard
DISCOVER

OFFICE SHOW

CUSTOMER

EXHIBITION

CERTIFICATION

FAQ

Q:Can I have a sample order?

A:Yes, we are willing to offer trial sample order to you for quality test. Mixed samples are acc eptable.

Q: What is the lead time?
A:Sample needs 1-3 working days, mass production time needs 10-15 working days for order less than 5000pcs.

Q: Do you have any MOQ limit?
A: No MOQ limit

Q: How do you ship the goods and how long does it take arrive?
A:The sample will be sent to you by optional shipping service (couriers, air, and sea). The deli very time depends on the shipping service.

Q:How will we proceed the order if I have logo to print?
A:Firstly, we will prepare artwork for visual confirmation. If the color and position are right, w e would make sampling firstly from silk print factory and take picture for your second confirm ation before mass production.