Parameter

[illegible]	[illegible]
[illegible]	226Lx44.5Wx72H (mm)
[illegible] doormax	1200
[illegible]	80-100kg
Ack [illegible]	NO
[illegible]	180
[illegible]	Spee1: 180 ° -15 °; SPEED2: 15 ° -0 °
[illegible]	-20 ℃ -45 ℃
[illegible]	[illegible]
[illegible]	1,000,000 [illegible]
[illegible]	2.1 [illegible]

Introduction

[illegible], [illegible] appliable [illegible] 1200 [illegible] 80-100kg

Dimesion Picture

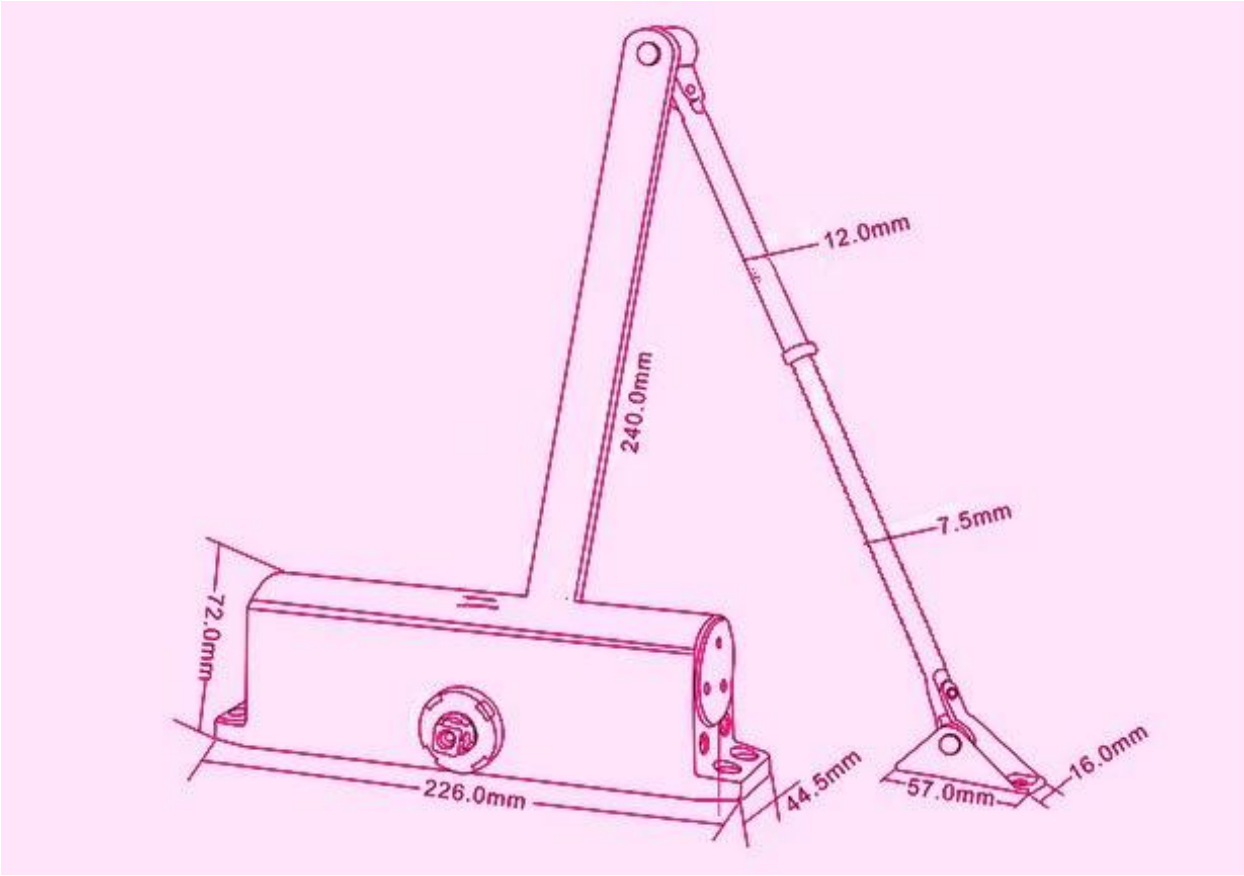

Packing list

SMQT

QTY / □□□	10
Demision (L * W * H) (□□.)	56 * 34 * 18
□□□□□□□□□□□□□ (□□.) / □□□	17.0

Office

SMQT

Exhibitions

SMQT