□□□□□□□□□□□	EA-85T	□□□□	115x80x19.5mm
□□□□□□□□□□□□□□□□□□□□□□	9V-16V DC	□□□□□□□□□□□□□□□□□□□	200mA
□□□□□□□□□□	4294967296	□□□□□□□□□□□□□□□□□□□□□	0-95%
□□□□□□□□□□□□□□□□□□□□	-10 ° -65°	□□□□□□□□□	□□□□□□□□□□□□□□□□□□
□□□□□□□□□□□□□□□	& lt; 100m	□□□□□□□□□□□	40-60mm
□□□□□	□□□□	□□□□□□□□□□□	□□□□□ IC □□□□ 13.56 MHz
□□□□□□□□	□□□□		

□□□□□□□□□□□□□ EA-85T □□□□□□□□□□□□□□□□□□?

Simple and reliable structural design, good heat dissipation shell

Imported PC material, high temperature, strong anti-interference

Offline software centralized management of device

Safety performance is high, waterproof IP65, tamper device

With reverse current protection, lightning protection

□□□□□□□□□□ IN-KIND

Wire Description
9-12VDC RED
GND BLACK
BUZZER YELLOW
GREEN LED ORANGE
Data 1 WHITE
Data 0 GREEN
HOLD BLUE
RS232-RX PURPLE
RS232-GND GREY
RS232-TX BROWN
Baud Rate 9600,8,1,N
Model No.:
Serial No.:
QC PASS
Power Rating : 12VDC, 80mA

□□□□□□□□□□□□□□□□

Wiring diagram

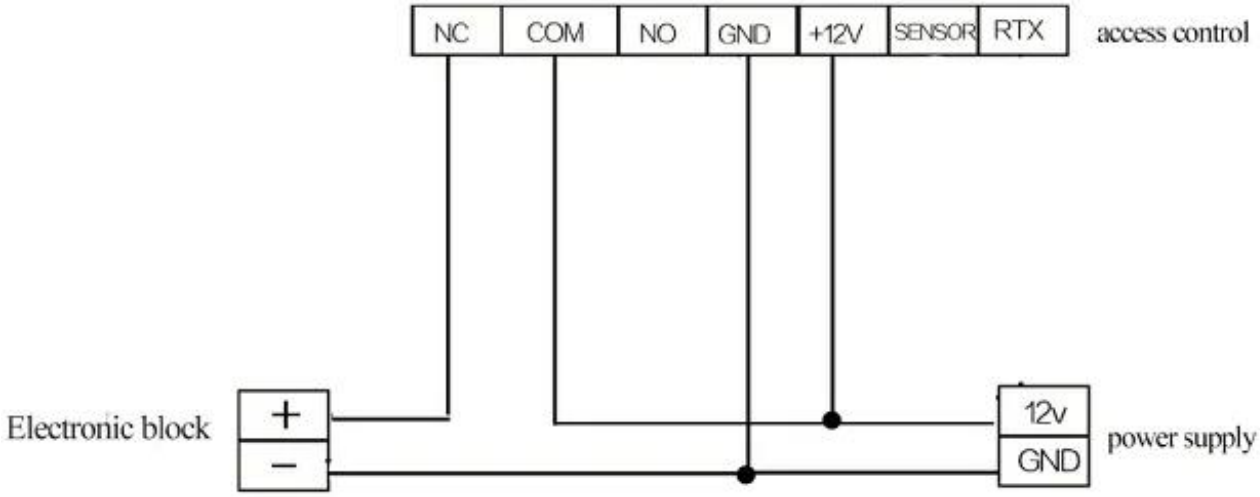

□□□□□□□□□□□□□□□□□□□□□□□□□□

SMQT
铭汗科技
请刷卡
Please read card
ACCESS CONTROL
ACCESS
ACCESS
二维码刷卡区
CARD HERE
CARD HERE
CARD HERE

OFFICE SHOW

SMQT
深圳市铭汗科技有限公司

□□□□□□

SMQT
深圳市铭汗科技有限公司

SMQT 铭汗科技
专业门禁定制商

□□□□□□□□□□

2011 Brazil Fair
2012 shen yang Fair
2013 Jinan Fair
2013 Shenzhen Fair
2017 Shenzhen Fair
2012 shen yang Fair
2013 shen yang Fair
2013 Shenzhen Fair
2015 Shenzhen Fair

□□□□□□□□□□

Certificate of Compliance
Certificate of Compliance
Certificate of Compliance
Certificate of Compliance
Certificate of Compliance
RoHS
RoHS
CE
CE
CE
CE

□□□□□□□□□□□□□□□□□□□□□□□□

PACKAGING & SHIPPING
Detection+Packing+Sealing+Fnishing+International Express
Inquiry
Reply
Contract
Receive payment&Product
Testing and packing
Delivery
Receiving

□□□□□□□□□□□□□□□□□

□□□: □□□□□□□□□□□□□□□□□□□□□□□□□□□□□□□□□□□□□?

[illegible]: [illegible] [illegible]

Q: [illegible]?

[illegible]: [illegible] 1-3 [illegible] 10-15 [illegible]

Q: MOQ [illegible]?

[illegible]: [illegible] [illegible] MOQ

[illegible]: [illegible]?

[illegible]: [illegible] ([illegible]) [illegible] 7-15 [illegible]

[illegible]: [illegible]?

[illegible]: [illegible] [illegible]

[illegible]