Standalone & □□□□□□□□□□□□ LED Strobe Light Siren / Horn

□□□□	
□□□□	Standalone & □□□□□□□□□□□□ LED Strobe Light Siren / Horn
□□□□	(PHi) 8 * (H) 3 □□
□□□□□□□□□□□□□□□□□	DC5V 1000mA
□□□□□□□□□□□□□□□□	□□□□□□□□□ 13mA
□□□□□□□□□□□□□□□□□□□□	□□□□□□□□□ 230mA
□□□□□□□	433MHz / 315MHz (□□□□□□□□□□□□□□□□□□)
□□□□□□□□□□□□□	□□□□□□□□□ EV1527, 330K
□□□□□□□□□□□□□□□□	□□□□□□□□□□□□□□□□□□ 3.7V / 280mAh
□□□□□□□□□□□□□□□□□□□	5 □□□□□□□□□□□□□□□□□□□□
□□□□□□□□□□□□□□□□	20 □□□□□□□□□□

□□□□□□□□□□□□□□□□□□□□□□□□ LED Strobe Light □□?

Standalone & Wireless Strobe Siren

At most 5 wireless remote controllers can be set

315MHz/433MHz (Optional),EV1527 coding chip

Bulid-in backup Battery 3.7V/280mAh lithium battery

There are 20 wireless defense zones for Strobe Siren

□□□□□□□□□□ IN-KIND

Siren

Siren

SET
DC 5V
ON
OFF

Siren

□□□□□□□□□□□□□□□

Standalone&Wireless Strobe Siren

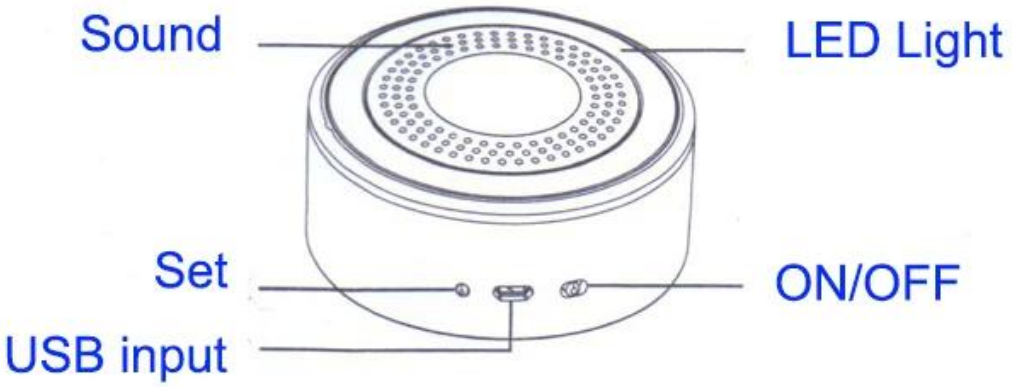

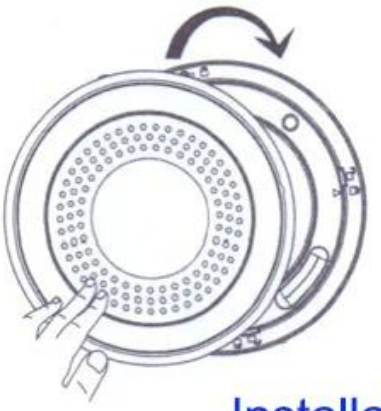

Installation

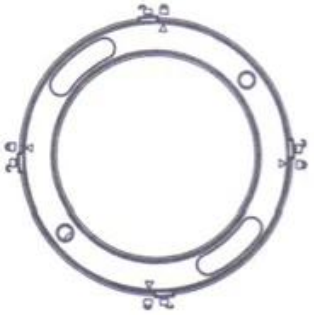

Bracket

Product Installaion

Fix and screw the installayion base on wall

Align the siren with the base, rotate by clockwise

Make sure fix well

Product List

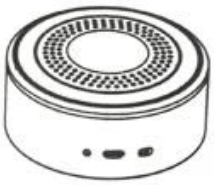

Wireless strobe siren*1

USB power cable*1

Srew*2

User manual*1

Can use with wireless door sensors and wireless motion sensors

□□□□□□□□

OFFICE SHOW

SMQT
深圳市铭汗科技有限公司

□□□□□□

SMQT
深圳市铭汗科技有限公司
SMQT

SMQT 铭汗科技
专业门禁定制商
SMQT 铭汗科技
专业门禁定制商

□□□□□□□□□□

2011 Brazil Fair
2012 shen yang Fair
2013 Jinan Fair
2013 Shenzhen Fair
2017 Shenzhen Fair
2012 shen yang Fair
2013 shen yang Fair
2013 Shenzhen Fair
2015 Shenzhen Fair

□□□□□□□□□□

Certificate of Compliance
Certificate of Compliance
Certificate of Compliance
Certificate of Compliance
Certificate of Compliance
RoHS
RoHS
CE
CE
CE

□□□□□□□□□□□□□□□□□□□□□□□□

[illegible]

[illegible]: [illegible]?

[illegible]: [illegible]

Q: [illegible]?

[illegible]: [illegible] **1-3** [illegible] **10-15** [illegible]

Q: MOQ [illegible]?

A: [illegible] [illegible] MOQ [illegible]

[illegible]: [illegible]?

[illegible]: [illegible]
([illegible]) [illegible] 7-15 [illegible]

[illegible]: [illegible]?

[illegible]: [illegible]
[illegible]
[illegible]

[illegible]
[illegible]