Access control power supply

AC 220V input ,DC 12V 3A output

Pure black color,Double face PC Board,

pure copper trsansformer,steel shell.

SMQT®

• Parameter

SMQT

□□□□□	
□□□ □□□□□□	□□□□□□ □□□□□□ □□□□□ □□□□□□ □□□□□□□ □□□□ □□□□□ □□□□□ □□□□□ □□□□
□□□□□	EA-37A
□□□	210 × 166 × 70 (□□□)
□□□□□ □□□□□ □□□□□□□□	AC220V
□□□□ □□□□□	50HZ
□□□□□ □□□□□□ □□□□□□□□	12V □□□□□□□
Ouput □□□□	3A
□□□□□ □□□□□□	12V / GND / PUSH / □□ / GND / NC / + PHSH / □□□□□□
□□□□□	□□□□□ □□□□□□□ □□□□□ □□□□ circut □□□□□□ interernce
□□□□□□ □□□	0 ~ 15 □□□□□
□□□□□ □□□	□□□□ □□□ □□□ □□□□ □□□□□ □□□□□ PC □□□□ □□□□□□ □□□ □□□□□ □□□□
□□□□□	□□□□
□ □□□□	□□□□ sysetm □□□□□□□ □□□□□ □□□□□□□
□□□□□□□□□□ □□□□	-20 ℃ ~ 61 ℃
□□□□□□ □□□□□	1.25KG
□□□□□□□□	□□□□□□ □□□ □□

• Introduction

SMQT

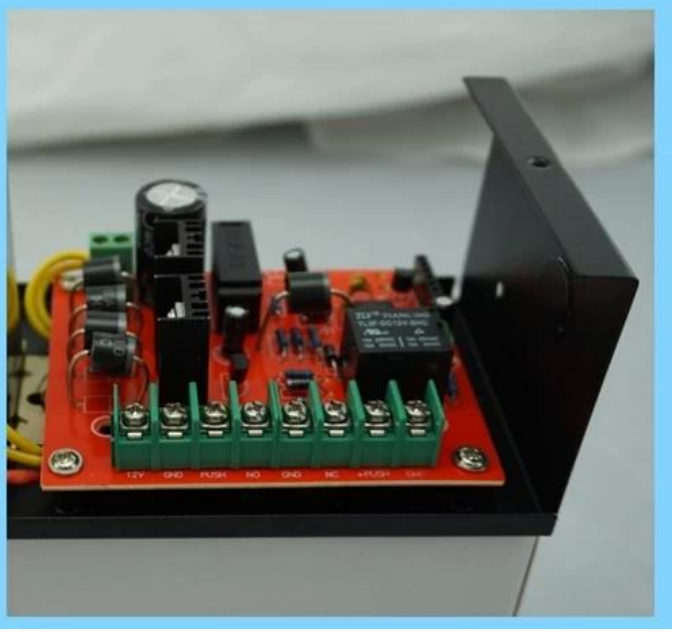

•Feature

SMQT

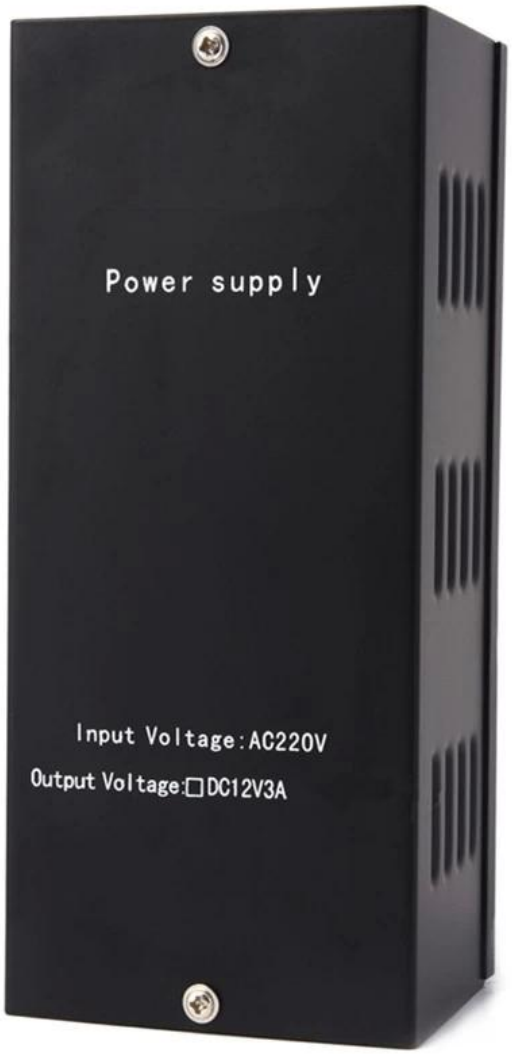

Access control uninterrupted switch power supply
AC 220V input voltage
DC 12V,3A output
0~15s time delay(adjustable)
Pure black color,double face PC board,
pure copper transformer
Remote control function is optional
Suitable for access contorl system,
door phone system
Two years warranty welcome OEM

•Application

SMQT

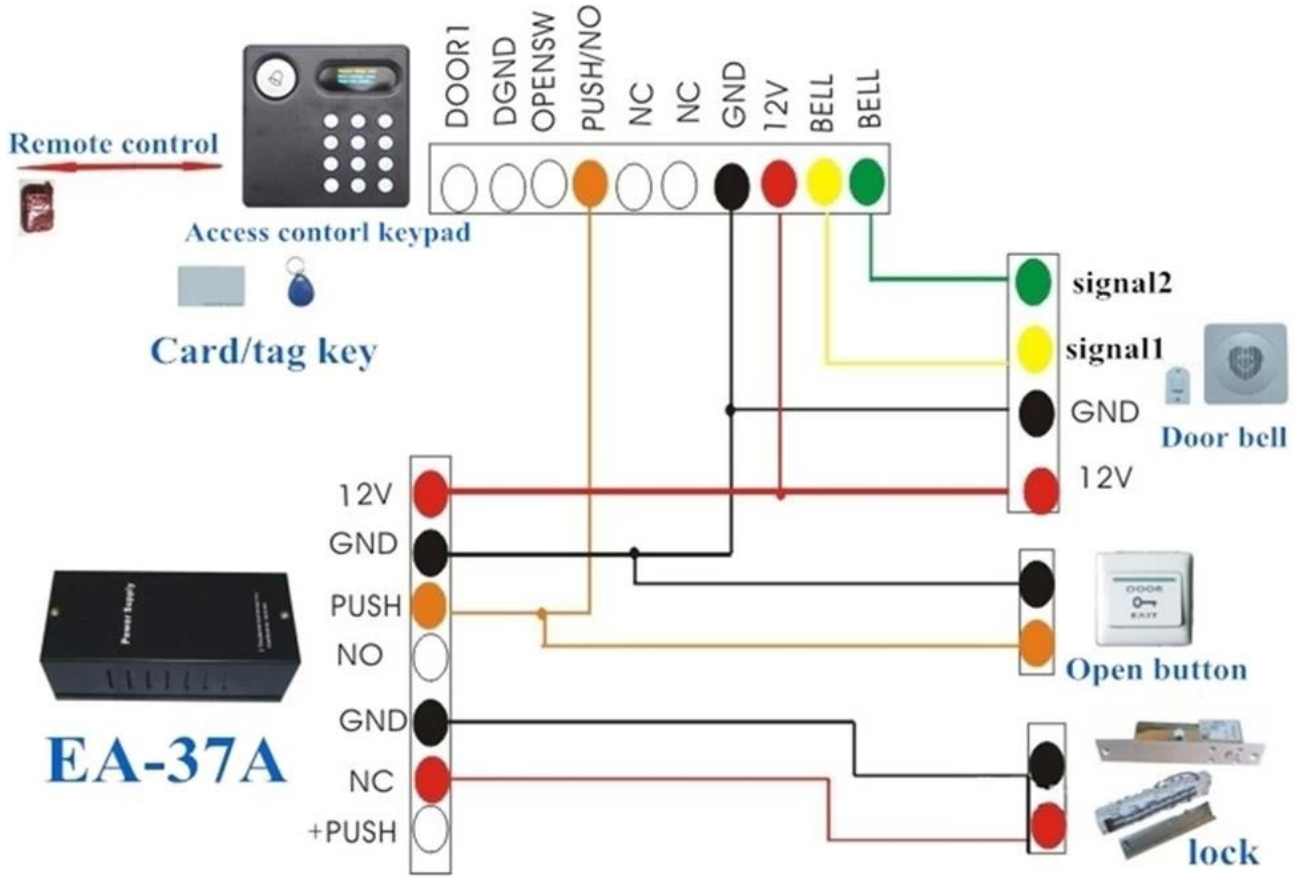

•Packaging & shipping

SMQT

□□□□□□□□ □□□□□□□ □□□□□	
□□□□□□ □□□	EA-37A
□□□□□□	20 □□□□□□□ □□ □□□□ □□□□□□□ □□□□
□□□□□□ □□□□□ □□□	45 * 32 * 32 (□□)
□□□	15KG

• *Office show*

SMQT

• *Exhibition*

SMQT

2011 Brazil Fair
2012 Shenyang Fair
2013 Jinan Fair
2013 Shenzhen Fair
共赢
.....
2012 Shenyang Fair
2013 Shenyang Fair
2013 Shenzhen Fair
2015 Shenzhen Fair