IP66 WG RFID □□□□□□□□□ □□□□ □□ □□□□□□ □□□□ □□□ □□□□□□□ □□□ □□□□ □□□□□□

□□ □□□□□□□□□ □□□□□□□□ EA-92K

□□□□□	
□□□□□	EA-92K
□□□□□	96 × 96× 22 (□□□)
□□□□□ □□□□□□□□□ □□□□	12V ± 3VDC
□□□□□□ □□□□□□□□	□□□□□□□□ & lt1 □W
□□□□□□□ □□□	□□□□ □□□□ 125 □□□□
□□□□□ □□□□□	60MM
□□□□ □□□□□□□□	150M
□□□□□□□ □□□	WG26 / WG34
□□□ □□□□	1bit / □□□□
□□□□□□□□□ □□□□ □□□□□	4 □□□bit / 8bit
□□ □□□□	□□□□□□□□□ □□□□
□□□□□	□□□□□□□□) □□□□ / □□□□)
□ □□□□	□□□□□□ □□□□ □□□□□□ □□□ □□□□ / □□□□□□
□□□□□□ □□□□□	-30 ℃ ~ 65 ℃
□□□□□□ □□□□□	0.2KG

1. □□□□ □ □□□□□ □□□□ □□□ □□□□□ □□□□□ □ □□□□ □□ □□□□ □□ □□□□□□ □□□□□
□□□ □□□□ □□ .□□□□□□□ OLED □ □□□□ □□ □□□□□□ □□□□□ □□□□□□

.(□□□□□□□□□ □□□□ □□□ □□□□□ □□□□□□) □□□□□□□ □□□□□□□
2.Using □ □□□□□□ □□□□□□ □□□□□□□□ □□□□ □□□ □□□□□□□□ □ □□□□□□ □□□ □□□□□□
□□□□□ □□ □□□□□□ □□□□□□□ □□ □□□□□□□□ □□□□ □□□□□□ □□ □□□□□ □□□□□ □□□□□ □□□□□□
.□□□□□□□ □□ □□□□ □□□□ □ (□□□□□ □□□ □□□□□ □□□□□) □□ □□□□□ □□□□ □ □□□□□□ □□□□□
□□□□ .3 Wiegand 26/34 .□□□□□□ □□□□□□ □□□□ □□ □ □□□□□□□□□□
□□ □□□□□□□ □ □□□□□ □□□□ □ □□□□□□ □□□□□□□ □□□□□□□ □□ □ □□□□□ □□□□□□ □□□□□ .4
.□□□□□□□
□□□□□□□ □□□□□ □□□□ □ □□□□□□□ □□□□□ □□□ □□□□□□ □□□□ □□□□ / □□□□□□ □□ □□□□□ .5.

Appearance

Size

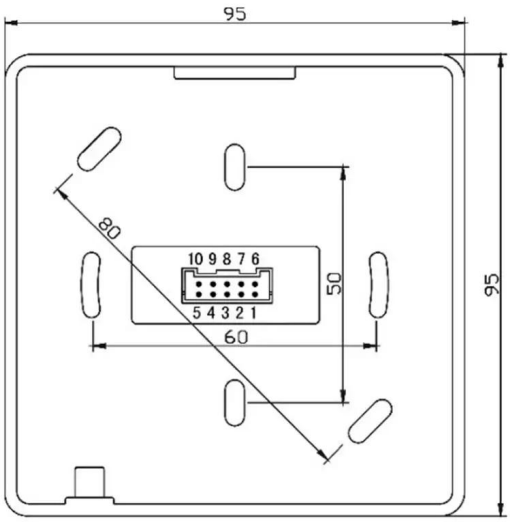

mm

Wire port introduction

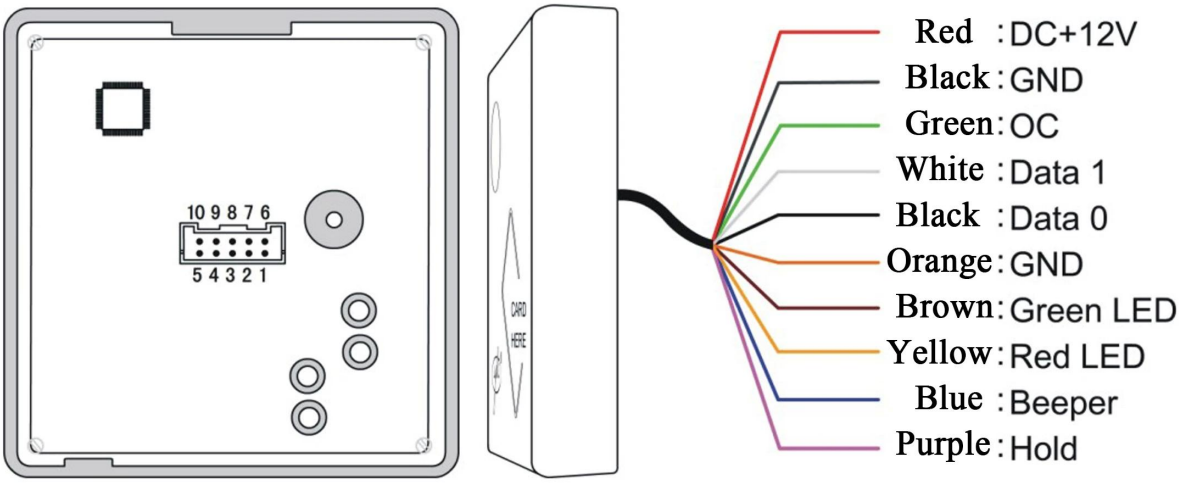

NO	Color	Function	Description
1	Red	12V+	DC Power 12V
2	Black	GND	DC Power 0V
3	Green	OC OUT**	OC Out to output doorbell signal or anti-tamper signal
4	White	DATA1	Wiegand DATA1 Output
5	Black	DATA0	Wiegand DATA0 Output
6	Orange	GND	Signal Grounding
7	Brown	Green LED*	Grounding to display 1st message and green LED lights up
8	Yellow	Red LED*	Grounding to display 2nd message and red LED lights up
9	Blue	Beeper	Beeper controller, grounding to work
10	Purple	Hold	Card reading controller,grounding to stop therefore reading

Wire diagram

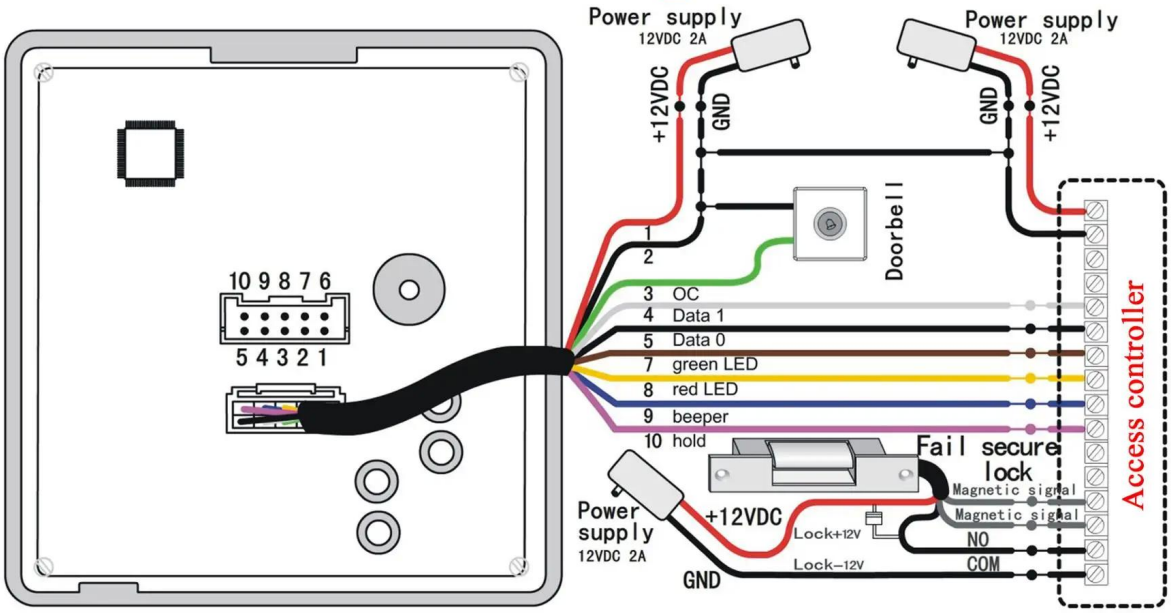
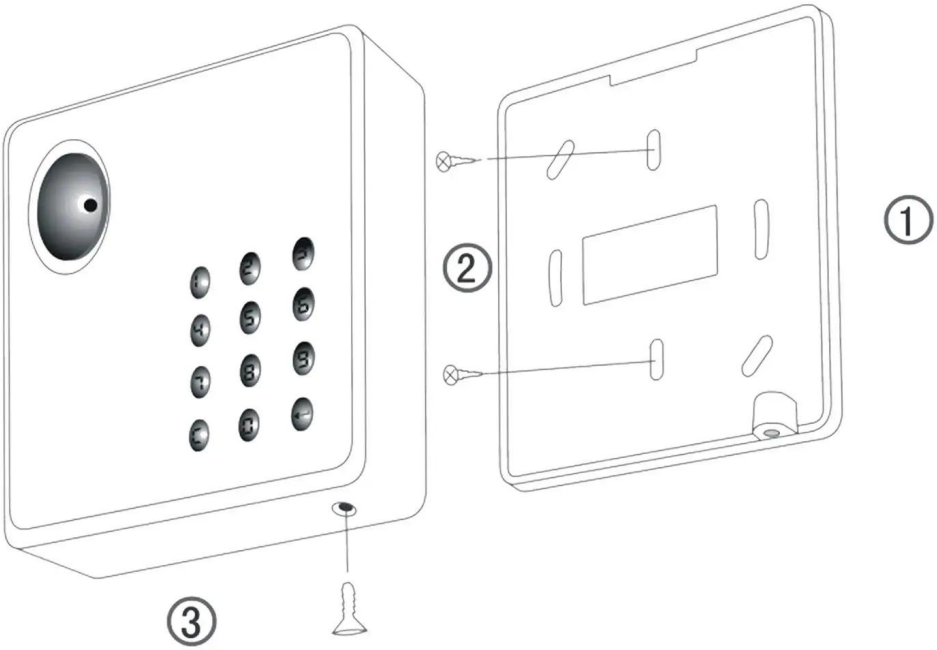
Installation