• Parameter

SMQT

□□□□□□	
□□□□□□ □□□	□□□□□□ □□ □□□□□□ □□□□□□□□ □□□□ □□□□ □□□ □□□□□ □□□□□□□
□□□□□□	EA-87A
□□□	120 × 56 × 18 (□□□)
□□□□□□□□ □□□□□ □□□□□	12V □□□□□□□
□□□□ □□□□□	□□□□□□□ & lt60 □MA
□□□ □□□□□□	2000PCS
□□□□ □□□□	5-8cm □□□□□ IC 3-6cm
□□□□□□□ □□□ □□□	0 ~ 99 □□□□□□□ □□□□) □□□□□)
□□□□□ □□□	□□□□ □□□□ □□□□ /□□□□□ / UID + □□□□□□ □□□□ + □□□□□ / □□□□ □□□□
□□□□ □□□□□	EM 125) □□□□□□ □□□□□KHZ)
□□□□□□ □□□□□□	□□□ / □□□□□□□ / □□□ □□□ / □□□□□□□ □□□□□□□ □□□□□□ □□□ / □□ □□ □□□□□□□ □□□
□□□□□	□□□□□ □□ □□□□
□□□ □□□□	□□□□ /□□□□□□□□ □□□□□□
□□□□ □□□□□	□□□ □□□□□ □□□□□□ □□□
□□□□□□□ □□□□ □□□□□	-10 ℃ ~ 50 ℃
□□□ □□□□	0.5KG

• Introduction

SMQT

1 2
3 4
5 6
7 8
9 0
* #

BELL_A Pink
BELL_B Pale blue
D_IN Brown
DC+12V Red
GND Black
Blue
Purple
Orange
OPEN

ACCESS CONTROL
87BIC

1 2
3 4
5 6
7 8
9 0
* #

BELL_A Pink
BELL_B Pale blue
D_IN Brown
DC+12V Red
GND Black
Blue
Purple
Orange
OPEN

•Feature

SMQT

Single door access control keypad

Working voltage 12V DC

Card capacity 2000 pcs

IC(13.56Mhz)/ID(125Khz) card type optional

Waterproof, suitable for outdoor

Button with LED back light

•Installation

SMQT

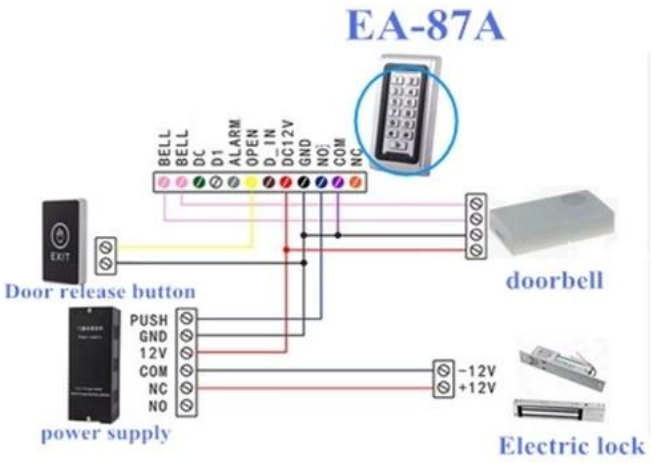

•Packaging & shipping

SMQT

□□□□□□□□□ □□□□□□□□ □□□□□	
□□□□□□ □□□	EA-87A □□□□□□□ □□□□□□□□ □□□□ □□□□ □□□ □□□□ □□□□□ □□□□□ □□□□
□□□□□□	20
□□□□□□ □□□□□ □□□	47 * 32 * 34 (□□)
□□□	17KG

•Office show

SMQT

•Exhibition

SMQT

2011 Brazil Fair
2012 Shenyang Fair
2013 Jinan Fair
2013 Shenzhen Fair
共赢
.....
2012 Shenyang Fair
2013 Shenyang Fair
2013 Shenzhen Fair
2015 Shenzhen Fair