Access control switch power supply

AC 110V~220V input
DC 12V, 5A output

SMQT

• Parameter

SMQT

□□	
□□□□	□□□□□□
□□	EA-32A
□□	120×96×38□mm□
□□□□	AC110V-220V
□□□□	50-60Hz
□□□□	12V DC
□□□□	5A
□□	□□□□□□□□□□□
□□	□□□□
□□	□□□□□□□□□□□
□□ □□	-20℃□61℃
□□	0.32kg

• Introduction

SMQT

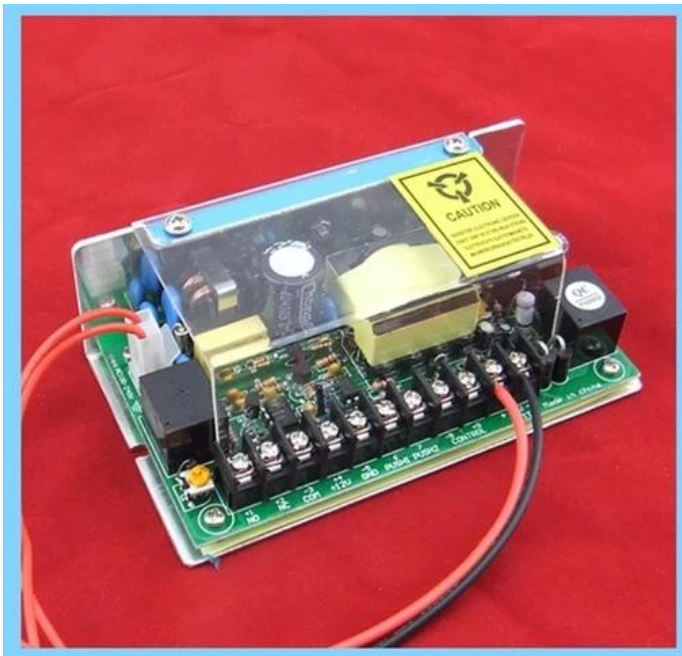
CAUTION
NO NC COM +12V GND PUSH1 PUSH2 CONTROL

CAUTION
SENSITIVE ELECTRONIC DEVICES
DO NOT SHIP OR STORE NEAR STRONG ELECTROSTATIC, ELECTROMAGNETIC, MAGNETIC OR RADIOACTIVE FIELDS.

CAUTION
NO NC COM +12V GND PUSH1 PUSH2

CAUTION
SENSITIVE ELECTRONIC DEVICES
DO NOT SHIP OR STORE NEAR STRONG ELECTROSTATIC, ELECTROMAGNETIC, MAGNETIC OR RADIOACTIVE FIELDS
NO NC COM +12V GND PUSH1 PUSH2 CONTROL
Made in China

CAUTION

•Feature

SMQT

Concise access control switch power supply
AC110V~240V input voltage
50~60Hz input frequency
DC 12V,5A output
Double side PC board,pure copper transformer
2 years quality warranty, welcoem OEM

•Application

SMQT

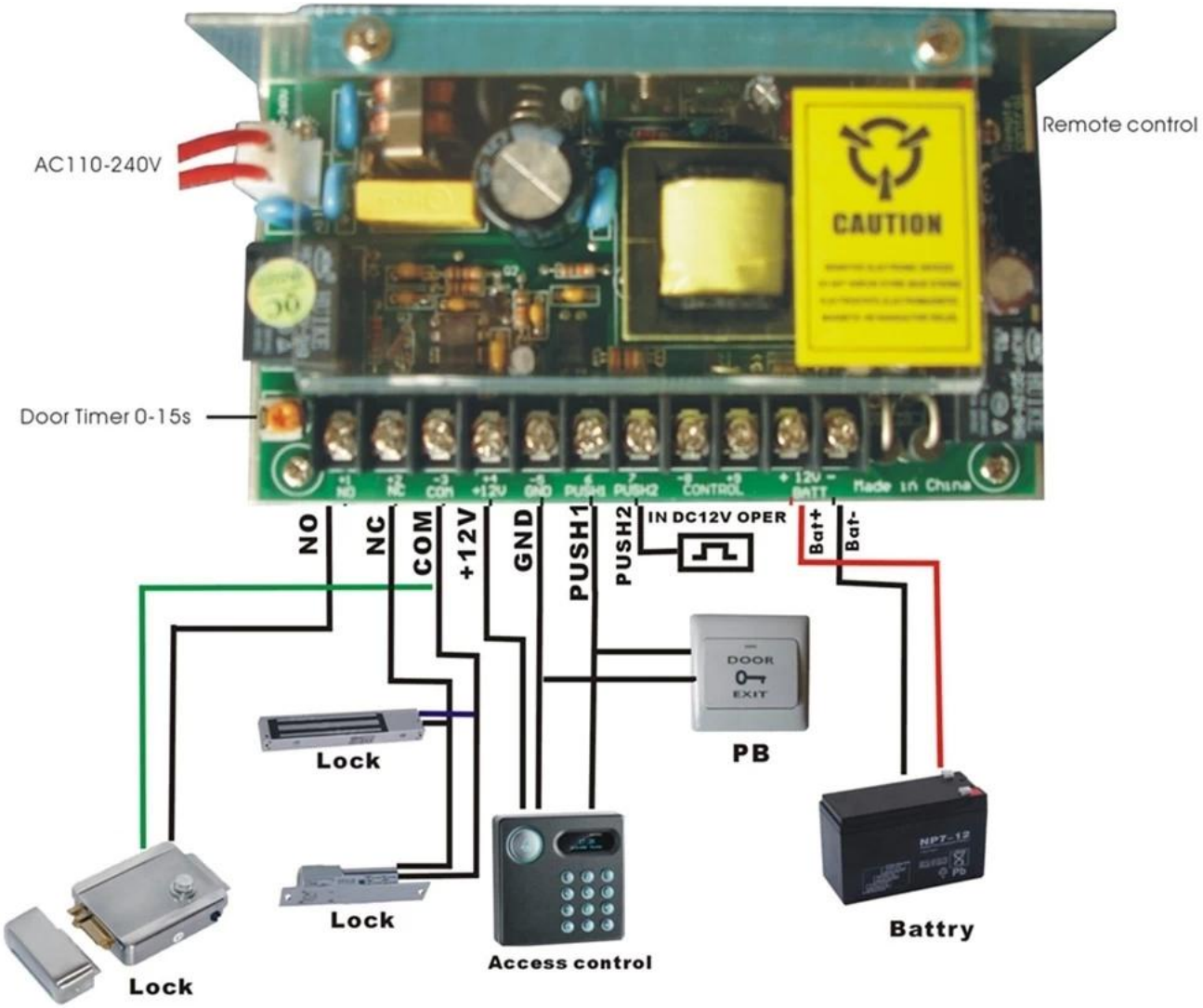

•Packaging & shipping

SMQT

□□□□	
□□□□	EA-32A □□□□□□
□□	□□41□
□□□□	45 * 32 * 32□cm□
□□	15kg

• *Office show*

SMQT

• *Exhibition*

SMQT

2011 Brazil Fair
2012 Shenyang Fair
2013 Jinan Fair
2013 Shenzhen Fair
共赢
.....
2012 Shenyang Fair
2013 Shenyang Fair
2013 Shenzhen Fair
2015 Shenzhen Fair