EA-93K□□IC 13.56Mhz□□□□□□□□

EA-93K□□□□□

□□	
□□	EA-93K
□□	96×96×22□□□□
□□□□	12V±3VDC
□□□□	<1□
□□□□	13.56Mhz□□□□
□□□□	60□□
□□□□	150m
□□□□	WG26 / WG34
□□□	1□/□□
□□□□	4□/ 8□
□□□□	□□□□
□□	□/□□□□□
□□	□□/□□□□□□□
□□□□	-30℃□65℃
□□	0.2□□

1.□□□□□□□□□□□□□□ □□□□□□□□□ □OLED□□□□□□□□□□□□□□□□□□□□□□ □□ □□□□□□□□□□□□□
2.□□□□□□□□□□□□□□□□ □□□□□□□□ □□□□□□□□□□□ □□□□□□□□□□□□ □□□□□□□□□□□□□□□□□□□
3. Wiegand 26/34 Communications□□□□□□□□□□□□□

4.□□□□□□□□□□□□□□□□□ □□□□□□□□□
5.□□□□/□□□□□□□□□□□□□□□□□ □□□□□

Appearance

Size

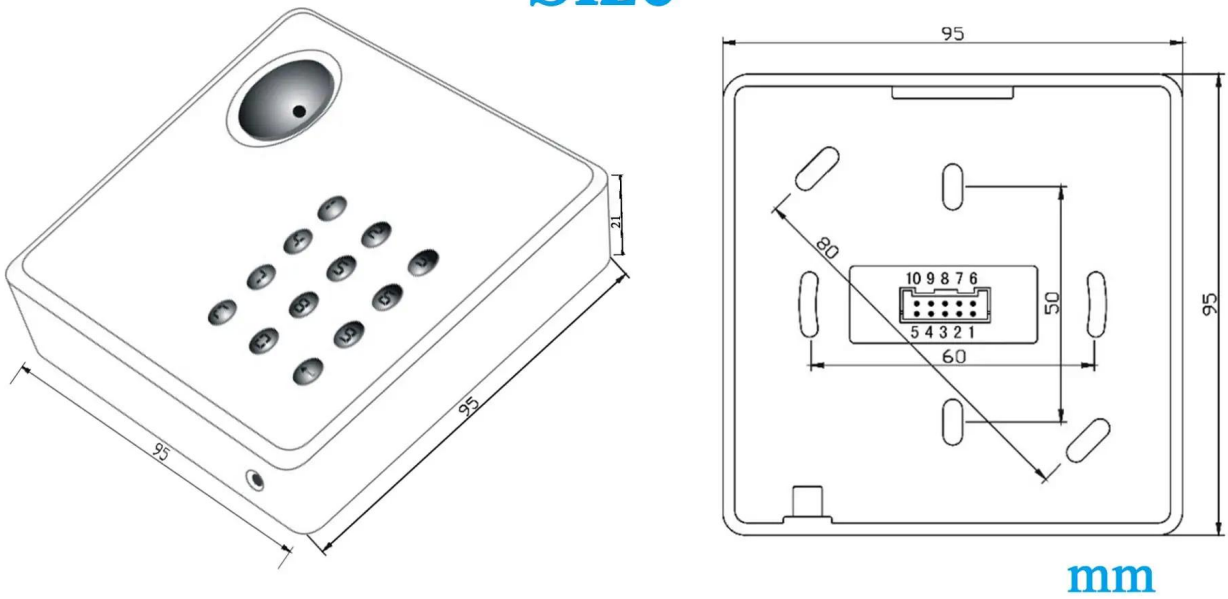

mm

Wire port introduction

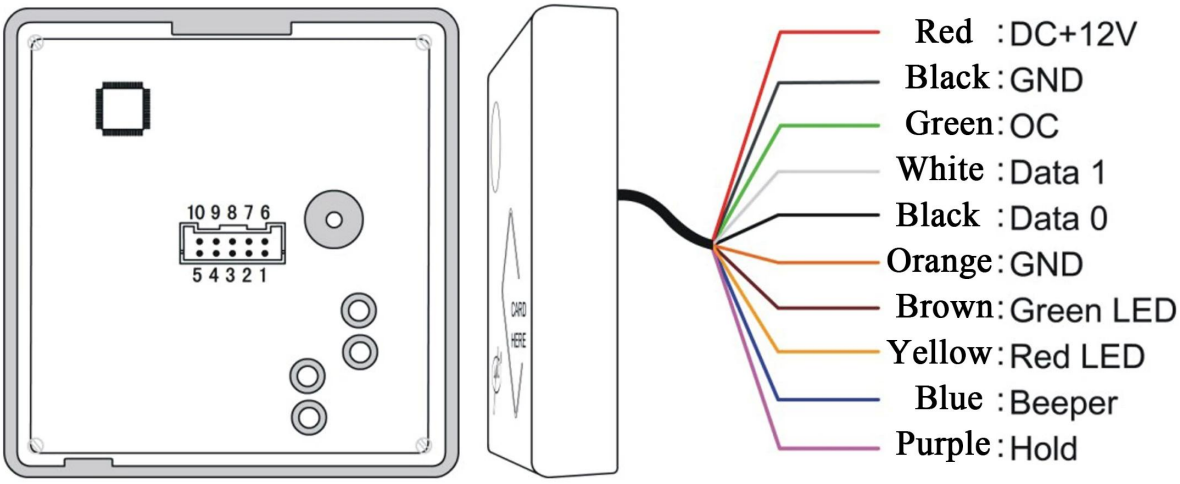

NO	Color	Function	Description
1	Red	12V+	DC Power 12V
2	Black	GND	DC Power 0V
3	Green	OC OUT**	OC Out to output doorbell signal or anti-tamper signal
4	White	DATA1	Wiegand DATA1 Output
5	Black	DATA0	Wiegand DATA0 Output
6	Orange	GND	Signal Grounding
7	Brown	Green LED*	Grounding to display 1st message and green LED lights up
8	Yellow	Red LED*	Grounding to display 2nd message and red LED lights up
9	Blue	Beeper	Beeper controller, grounding to work
10	Purple	Hold	Card reading controller,grounding to stop therefore reading

Wire diagram

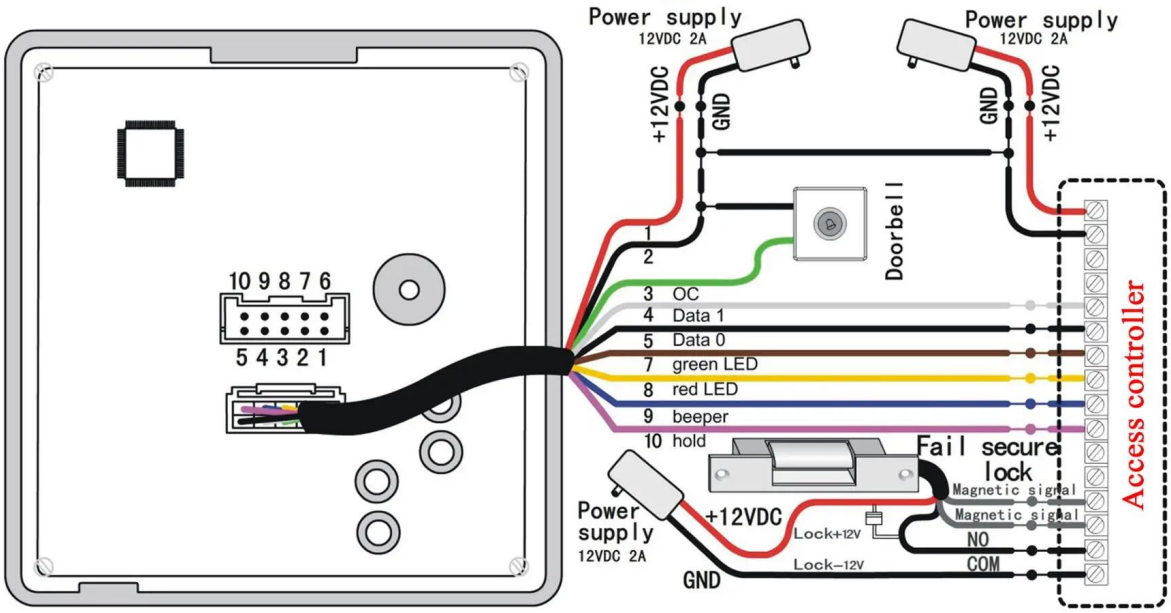

Installation

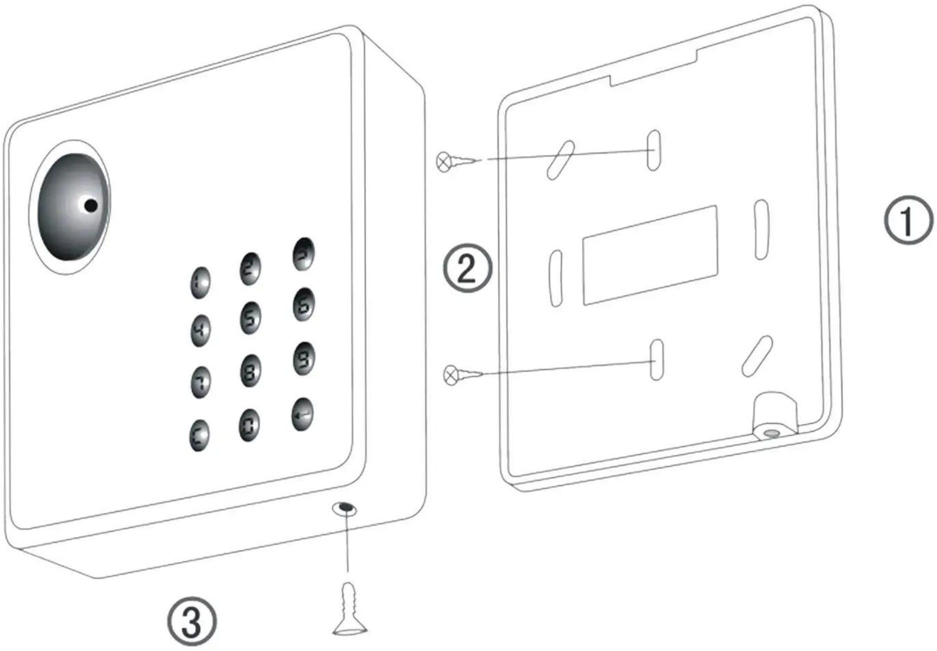

□	SMQT / OEM
□□□□	□□□□□□□
□□□□	□□□□□□□□□□□□□□□□□□□□□□□□□□□□□□□□□□□□□□EM□□□□□□□ □□□□□□□□PIR□□□□□□□□□□□□□□□□□□□□□□□□□
□□□□□	2□
□□□□	OEM&OEM□□□□□□□□□□□
□□	CE□Rosh
□□□□	□□1000□
□□□□	7-15□
□□□□	□□□□□□□□□□□□□□