□□□	□□□□□□□□		
□□□	EA-904	□□□□□□	400MHz□
□□□□□	Linux□	□□□□□	□□10.93 quard Core
LCD□□□	2.8“TFT□□□□□	□□□□□	0.6sec
□□□□□	3000□10000/30000/50000□□□	□□□□□	80000/120000/300000
□□□□□	RS485□TCP / IP□USB□USB□□	□□□□□	□□□RFID□□□□
□□□	□□□□□□	□□□	220□□*80□□*26□□
□□□□□	5VDC	□□□□□□□	□□□□□□□
□□□	175□□*120□□*30□□	□□□□□	1000□□+1000□□

□□□□□□□□□□□□□□□□

Wiring diagram(accesss control):

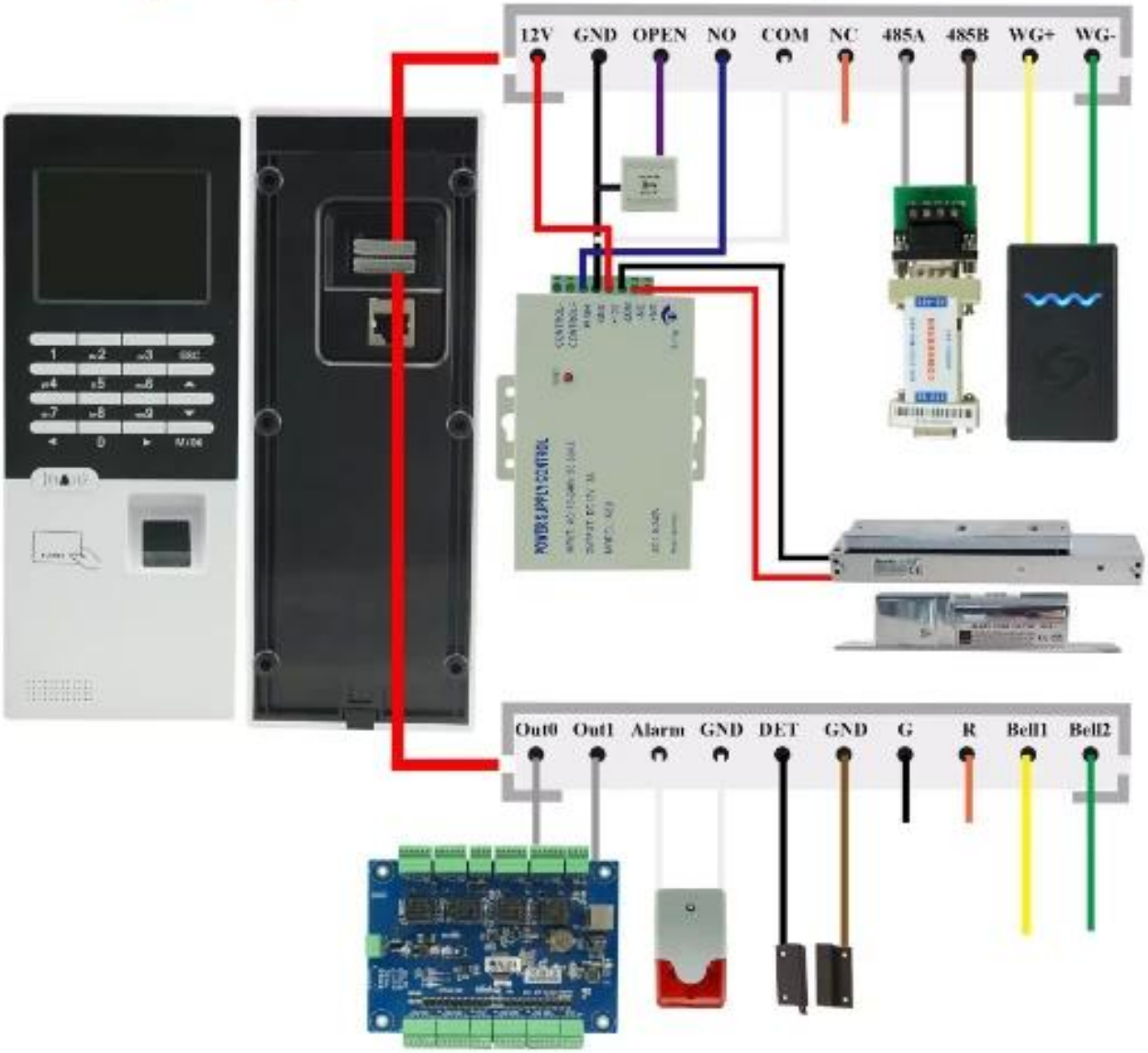

□□□□

Reset

□□□□

17:23

□□□□□

SMQT
深圳市铭汗科技有限公司

SMQT
深圳市铭汗科技有限公司
SMQT

SMQT
专业门禁定制商
SMQT
专业门禁定制商

2011 Brazil Fair
2012 shen yang Fair
2013 Jinan Fair
2013 Shenzhen Fair
2017 Shenzhen Fair
2012 shen yang Fair
2013 shen yang Fair
2013 Shenzhen Fair
2015 Shenzhen Fair

□□

Certificate of Compliance
Certificate of Compliance
Certificate of Compliance
Certificate of Compliance
Certificate of Compliance
RoHS
RoHS
CE
CE
CE

□□□□

Trade terms:	**EXW**
Payment terms:	**T/T, Western union, Paypal etc**
Delivery time:	**Normal order within 7 days, bulk order 10-15days**
Packing:	**Neutral paper box and paper carton**
Shipping:	**Express company or by sea, by air or appointed by buyer**