□□	
□□	EA-53C
□□	226×44.5×76□□□□
□□□	19×230□□□□
□□□□□	85□□□□
□□	≤1150mm
□□□□	□□
□□□□□	180°
□□□□□□	□□1□180°-15°;□□2□15°-0°
□□□□	-20℃-45℃
□□□	□□□□□□
□□□□□□□	1000000cycles
□□	□□□□□□
□□	2.5□□

□□□EA-53C□□□□□□

1.Back Check and Delay Action available.

2.High quality alloy door closer body, silver coating finished.

3.With standard foldable arm. Parallel arm channel,hold-open arm are optional

4.1,000,000 times tested without damage.5 years warranty

5.can be used on the wooden door, steel door, fire door and places where security is strictly required

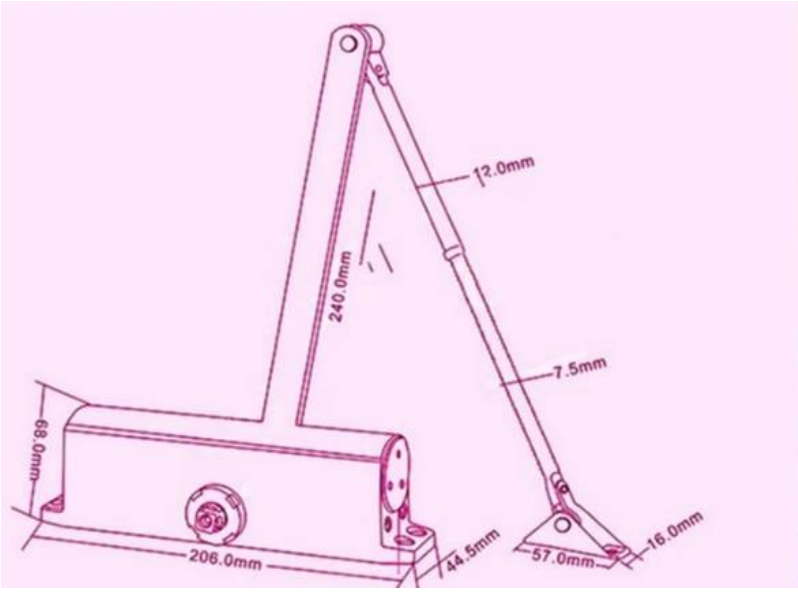
12.0mm
240.0mm
7.5mm
68.0mm
206.0mm
44.5mm
57.0mm
16.0mm

□□□□

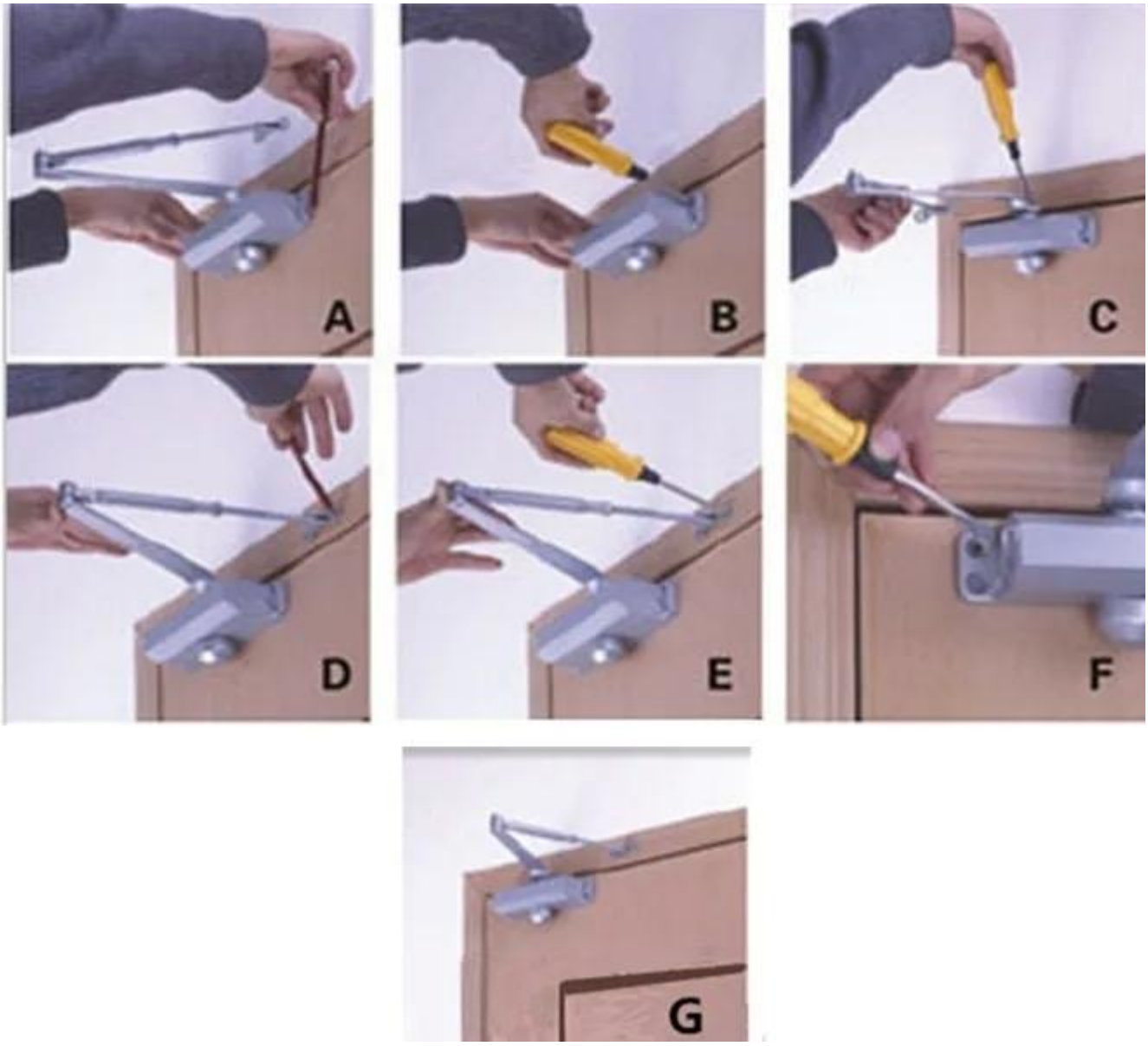
A
B
C
D
E
F
G

• Office Show

SMQT

• Customer

SMQT

• Exhibition

SMQT

• Certificates

SMQT