Parameter

SMQT

□□□□	□□□□□□
□□	EA-37A
□□	180L * 80W * 60H□mm□
□□□□	DC12V
□□□□	□3A
□□□□	12V / GND / PUSH / NO / GND / NC / + PUSH / GND
□□□□	0-15s
□□□□	□□□□□□□□□□□□□□□□
□□□□	□□□□□□□□
□□	□□□□□□□□□□□□□□□□□□□□□□
□□□	□□

Introduction

SMQT

门禁专用系列
Power supply
JSJ 5737
PRI:220V ~50Hz RED--RED
SEC:13.5V--0V YEL--YEL
DATE:2015-12-10

□□□□□□□□□□□□□□□□□□□□□□□□□□

•Dimension

SMQT

•Feature

SMQT

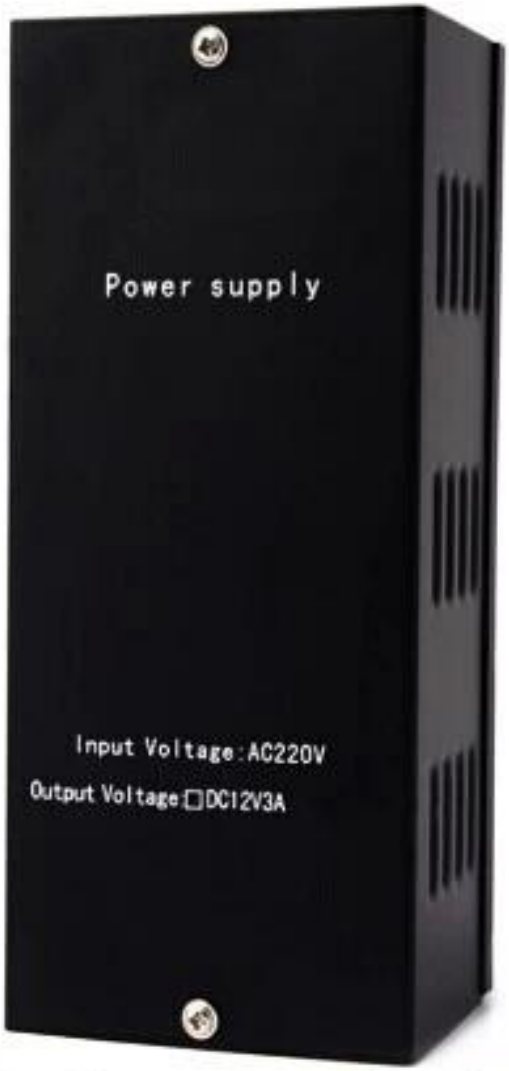

Access control uninterrupted switch power supply
AC 220V input voltage
DC 12V,3A output
0~15s time delay(adjustable)
Pure black color,double face PC board,
pure copper transformer
Remote control function is optional
Suitable for access contorl system,
door phone system
Two years warranty welcome OEM

•*Installation*

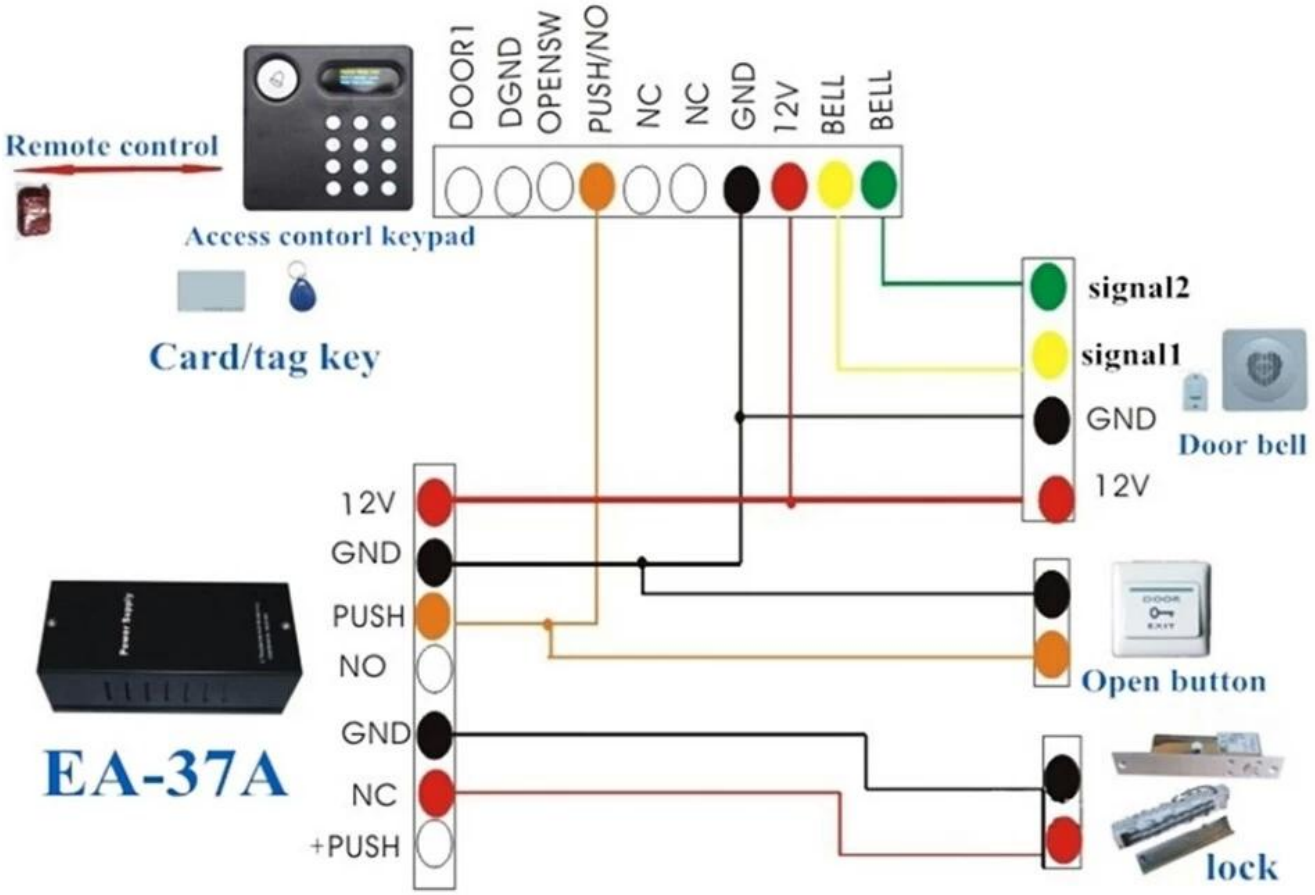

•*Packaging & shipping*

SMQT

• *Office show*

SMQT

• *Exhibition*

SMQT

2011 Brazil Fair
2012 Shenyang Fair
2013 Jinan Fair
2013 Shenzhen Fair
共赢
.....
2012 Shenyang Fair
2013 Shenyang Fair
2013 Shenzhen Fair
2015 Shenzhen Fair