RFID ID / IC□□□□□□□□□□□□□□□□□□□□

SMQT
New
Access control &Alarm product supplier
ACCESS CONTROL

Size

Appearance

EA-81K□□□□□

□□□□□	RFID ID / IC□□□□□□□□□□□□□□□□□□□□
□□□	EA-81K
□□□□□	12V DC
□□□□□	<100□□

□□□	120×75×25□□□□
□□□□□	1000□□□
RFID□□□□	ID□125KHZ□/ IC□13.56MHZ□□□□□
□□□□□	3□7□□
□□□□	□□□□□□WG□□□
□□□	□□□□
□□□	□□□□□□
□□□	□□□□□□□□□□□□□□□□
□□□	ABS□□+ PCB□
□□□	150□
□□□	□□□□□□□ □□1□□□□100□
□□□□□□□	-35℃□70℃
□□□□□	20□□80□
□□□	1□□□
OEM□	□□OEM

Wire diargram

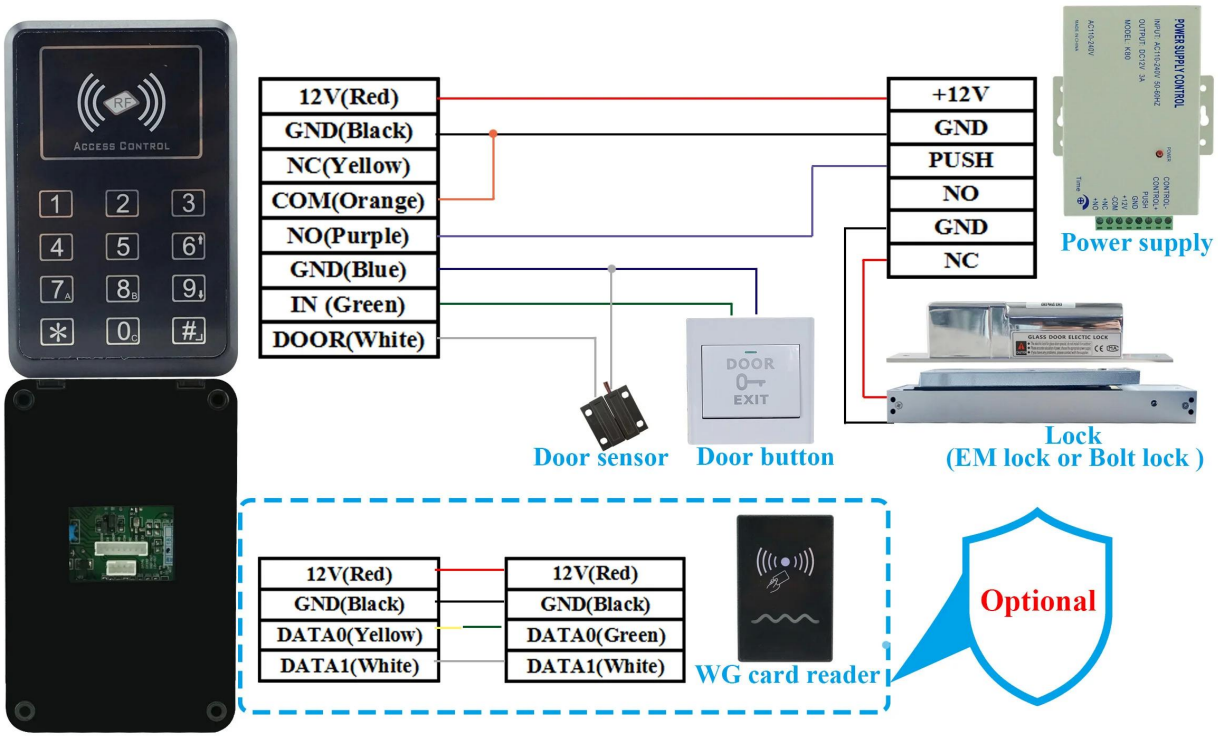

Where to use?

Laboratory

Archives

Indoor office

Computer room

□□□□□□□□□□

SMQT
铭汗科技
CARD HERE
请刷卡
Please read card
ACCESS
ACCESS CONTROL