## • Parameter

SMQT

| □□ | |
|---|---|
| □□□□ | □□□□□□□□□□□□□ |
| □□□ | EA-87A |
| □□ | 120×56×18□□□□ |
| □□□□ | 12V DC |
| □□□□ | <60□□ |
| □□□ | 2000PCS |
| □□□□ | ID 5-8CM<br>IC 3-6CM |
| □□□□□ | 0□99 □□□□□ |
| □□ □□ | □/ □□□□/ UID +□□/□+□□ |
| □ □□ | ID□125KHZ□ |
| □□□□ | □ □□□□/□□/□□/□□□/□□ |
| □□ | □□ |
| □□ □□ | □/ □□□ |
| □□ □□ | □□ □ |
| □□ □□ | -10 ℃□50℃ |
| □ □□ | 0.5□□ |

## • Introduction

SMQT

1 2
3 4
5 6
7 8
9 0
* #

BELL_A Pink
BELL_B Pale blue
D_IN Brown
DC+12V Red
GND Black
Blue
Purple
Orange
OPEN

ACCESS CONTROL
87BIC

1 2
3 4
5 6
7 8
9 0
* #

BELL_A Pink
BELL_B Pale blue
D_IN Brown
DC+12V Red
GND Black
Blue
Purple
Orange
OPEN

## •Feature

SMQT

***Single door access control keypad***

***Working voltage 12V DC***

***Card capacity 2000 pcs***

***IC(13.56Mhz)/ID(125Khz) card type optional***

***Waterproof, suitable for outdoor***

***Button with LED back light***

## •Installation

SMQT

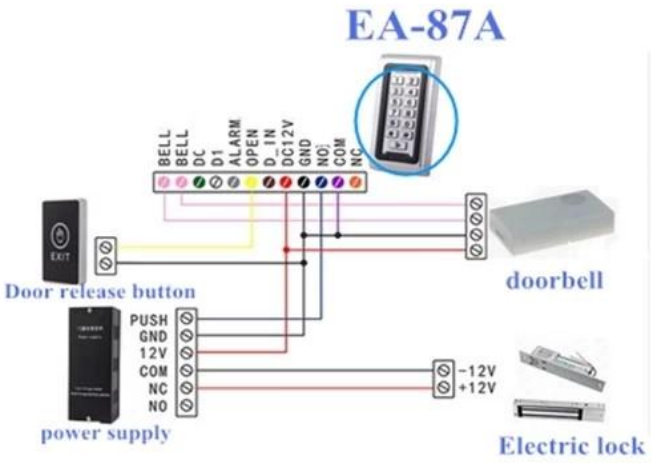

## •Packaging & shipping

SMQT

| □□□□ | |
|---|---|
| □□□□ | EA-87A□□□□□□□□□□□□ |
| □□ | 20 |
| □□□□ | 47 * 32 * 34□□□□ |
| □□ | 17□□ |

## •Office show

SMQT

## •Exhibition

SMQT

2011 Brazil Fair
2012 Shenyang Fair
2013 Jinan Fair
2013 Shenzhen Fair
共赢
.....
2012 Shenyang Fair
2013 Shenyang Fair
2013 Shenzhen Fair
2015 Shenzhen Fair