Parameter

Dimension	35.3L*28W* 6.4H (mm)
Coil chips	TK4100
Frequency	125KHz
Sensing distance	2cm ~ 8cm
Materials	ABS
Optional color	Yellow, gray, purple, blue, black and red

Introduction

ABS shell and fill epoxy encapsulated chip coil, and combine of ultrasonic welding shaped cards with various shapes.
Silk screen icon, marking; waterproof, dustproof, anti-vibration.
Working temperature is -30℃ ~ + 50 ℃.
Access attendance lock for induction proximity,door access control and so on.

Dimesion Picture

Installations

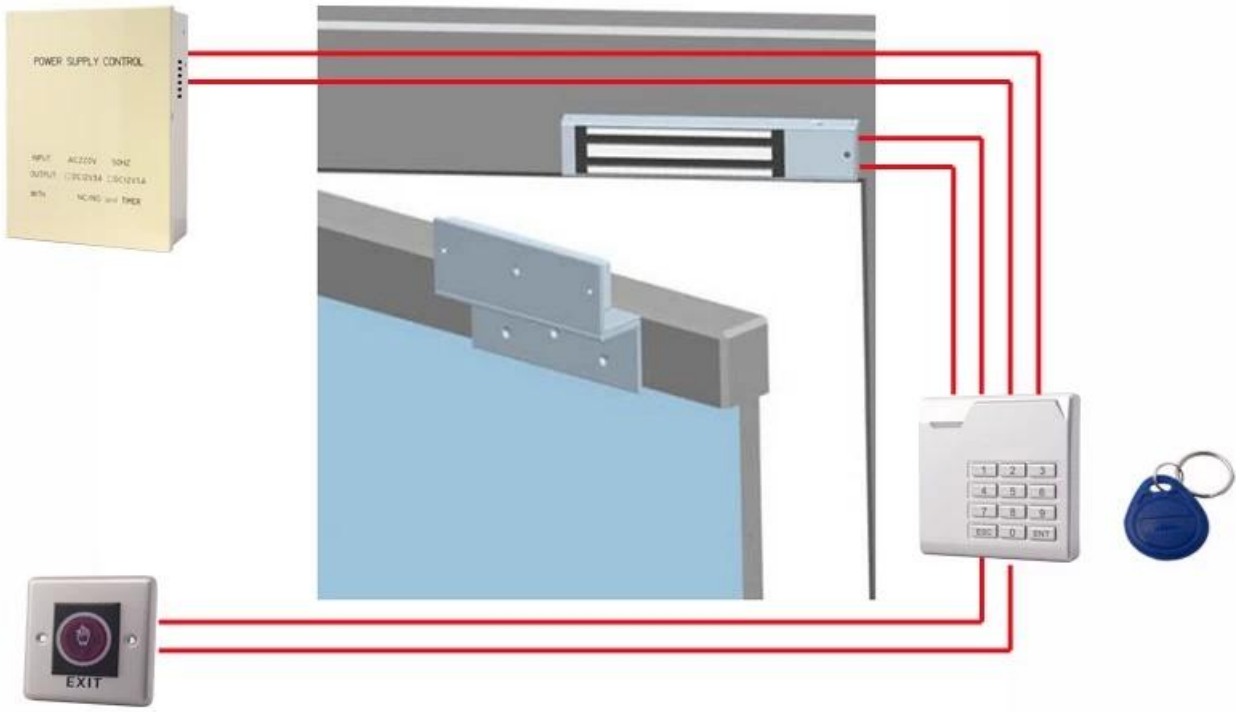

Features

SMQT

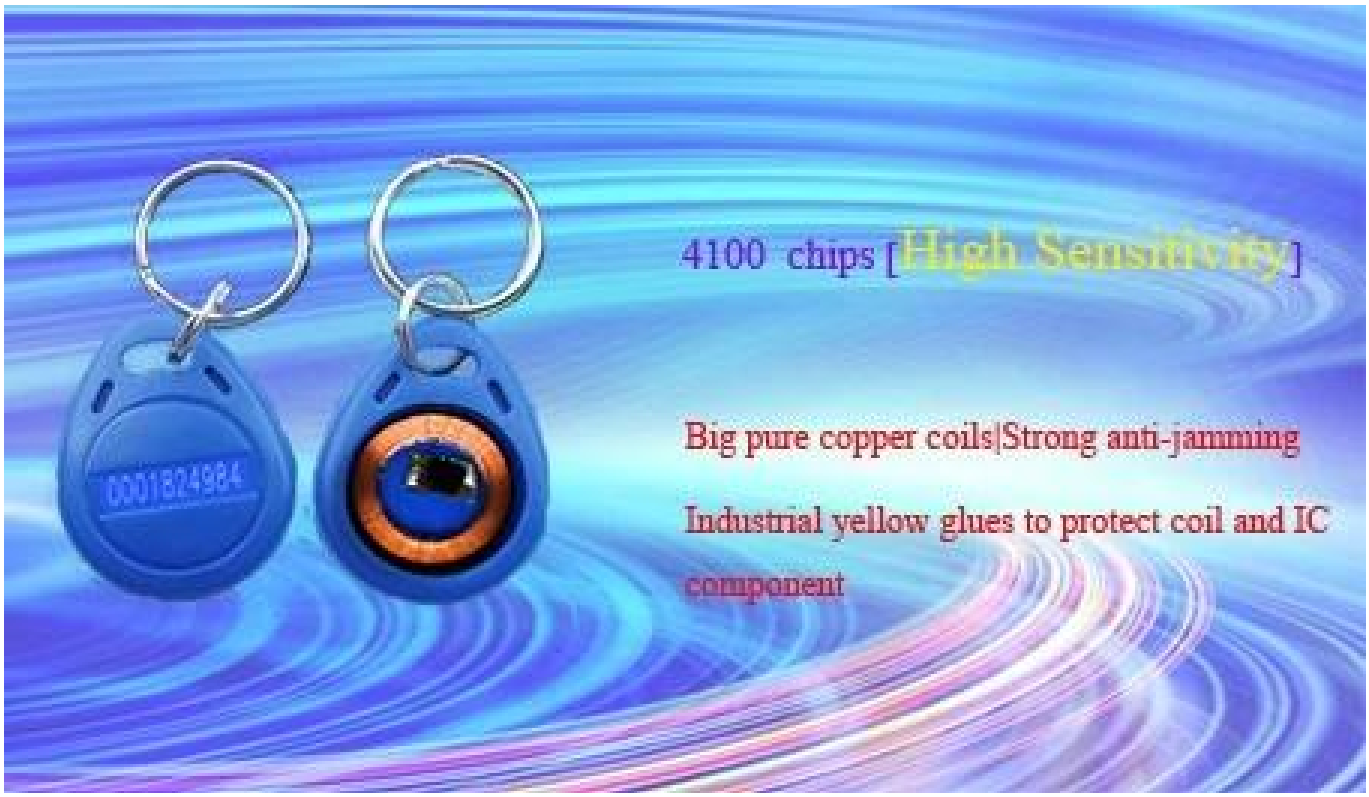

Packing list

SMQT

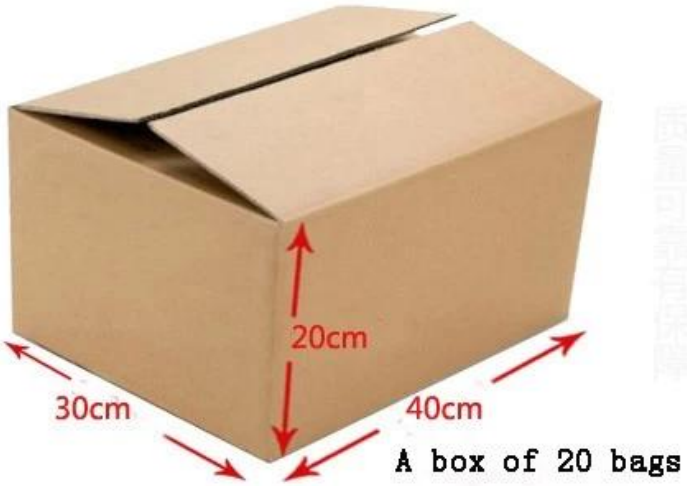

QTY	2000pcs/CTN
Carton dimesion	40L*30W*20H(cm)
Net weight	12kg

Exhibitions

SMQT