Parameter

SMQT

model	ABE
detecting distance	Indoor: 150m 300m 450m 600m 750m Outdoor: 50m 100m 150m 200m 250m (optional)
operating voltage	13.8 ~ 24VDC 11 ~ 28VAC
operating current	40-65mA
indication speed	50 ~ 700m / sec
Anti-demolition output	NC
Environment temperature	-20℃~ + 50 ℃
Alarm output	NO / NC
Level adjustment	180 ° ± 90 °
Vertocal adjustment	± 10 °
color	black
material	PC resin

Introduction

SMQT

Photoelectric sensors infrared laser beam is waterproof security infrared beams for your apartment.It is safety for your home.
Sealed integration structure has the ability to work in hash environment.
Confronted with fog or inclement weather, the detector will automatically regulate the sensitivity (AGC circuit).
Easy to adjust and calibrate the horizontal / vertical optical angle.
Built-in integrated optical telescopes, use the professional anti-jamming jacket.
Anti-lightning circuit design.
High power infrared receiver tubes, low-power digital.

Dimesion Picture

SMQT

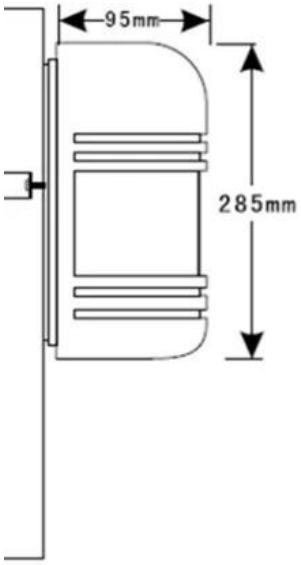

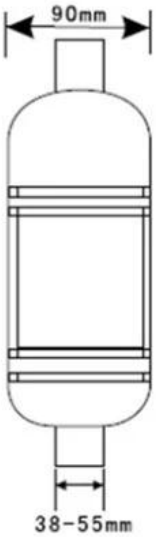

Installations

SMQT

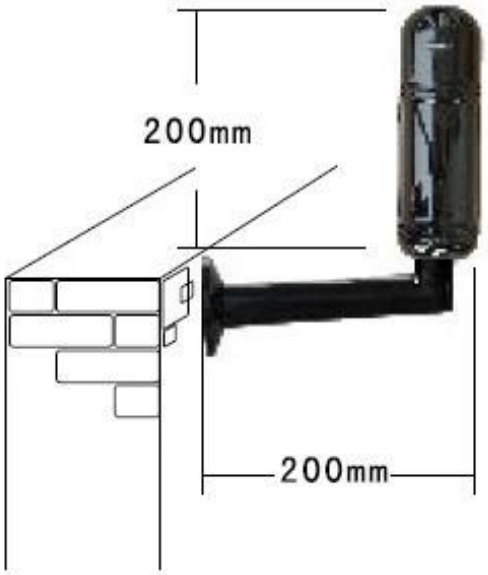

Optional Bracket Accessories:

T Bracket

T-200
200×120mm

T-100
100×120mm

L Bracket

80×75mm

I Bracket

I-100
100mm
I-200
200mm

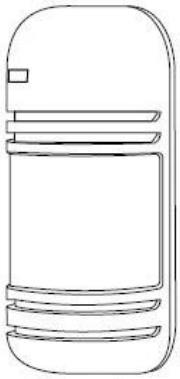

Housing

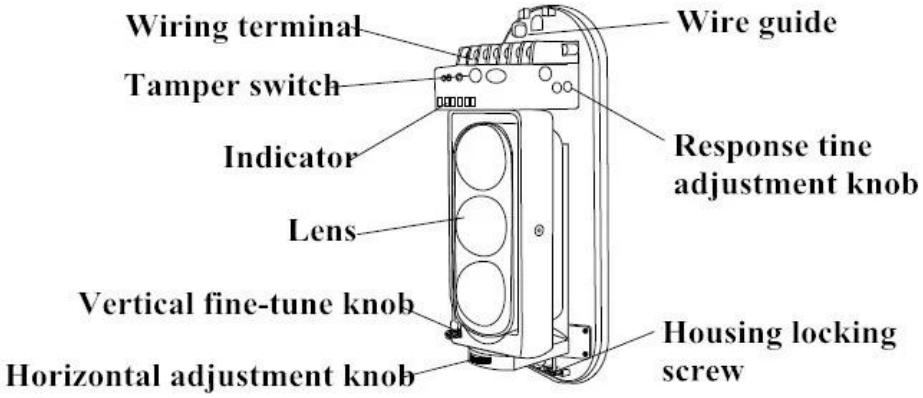

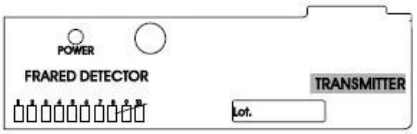

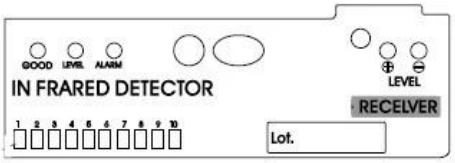

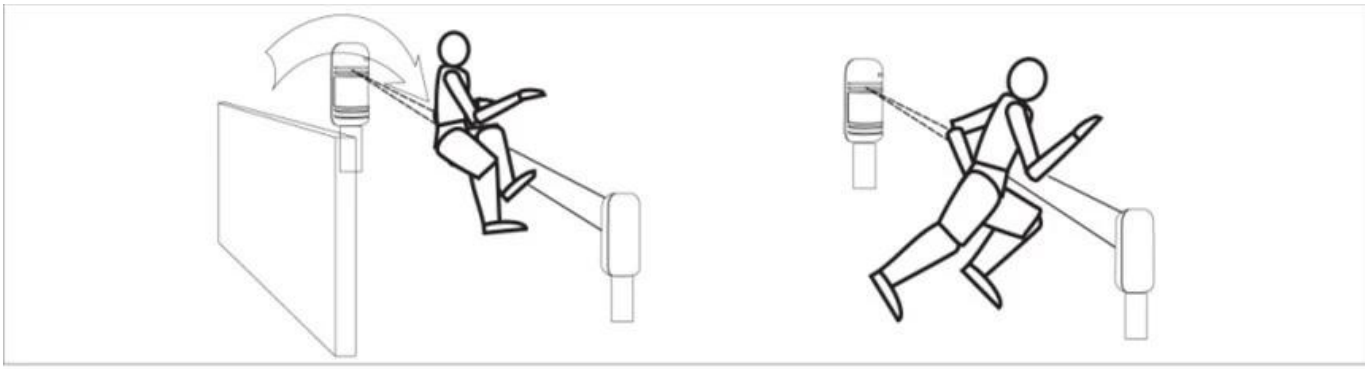

High speed

Fast running(6.9m/s)

Fast walking(1.2m/s)

Normal walking(0.7m/s)

Slow walking(0.4m/s)

Packing list

SMQT

ê

Exhibitions

SMQT