Name:	Fingerprint access control time attendance keypad		
Model Number:	EA-904	CPU:	400MHz
Operating System:	Linux	Algorithm Version:	Version 10.93 quard Core
LCD Dimension:	2.8” TFT color display	Verification Speed:	0.6sec
Fingerprint Capacity:	3000(10000/30000/50000 are customrized)	Transaction Capacity:	80000/120000/300000
Communication Format:	RS485,TCP/IP, USB,USB driver	Verification Mode:	fingerprint, RFID card, password
Language:	English, Chinese, etc.	Dimension:	220mm*80mm*26mm
Working voltage:	5VDC	Authentication method:	fingerprint, password, card
Size:	175mm*120mm*30mm	User capacity:	1000 fingerprint +1000 password

What Features of our fingerprint reader?

Wiring diagram(accesss control):

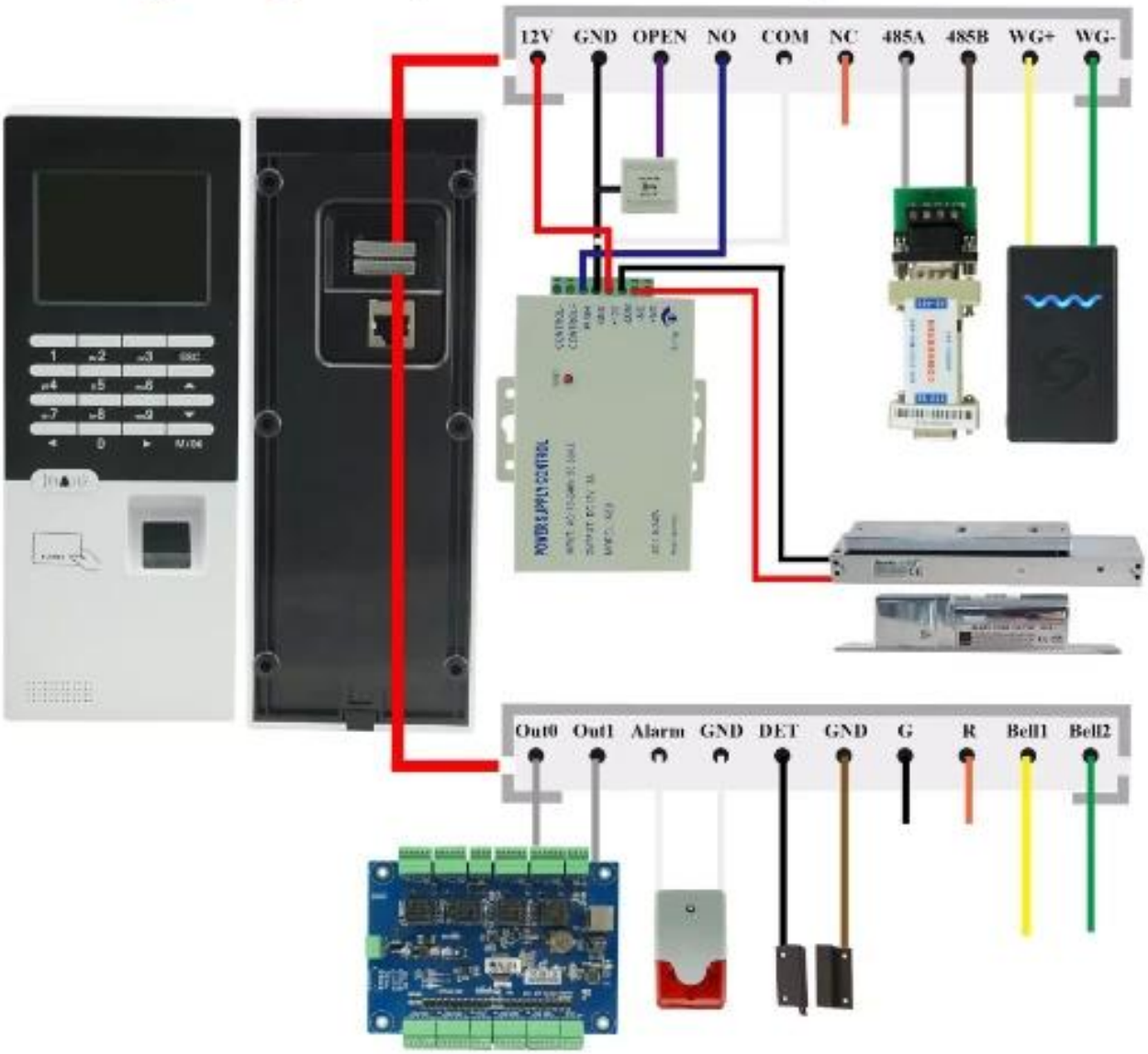

IN-KIND SHOOTING

Reset

SHOW CASE

OFFICE SHOW

CUSTOMER

EXHIBITION

CERTIFICATE

HOW TO COOPERATION

Trade terms:	**EXW**
Payment terms:	**T/T, Western union, Paypal etc**
Delivery time:	**Normal order within 7 days, bulk order 10-15days**
Packing:	**Neutral paper box and paper carton**
Shipping:	**Express company or by sea, by air or appointed by buyer**