Small Type Waterproof Home Alarm Warning Siren Horn Speaker

Specification	
Model	EB-165
Dimension	69×69 ×65(mm)
Working power	12V DC
Operating current	300mA
Sound Pressure	115dB
Contact output	NO/NC
Suitable for	Fire alarm , Home security
Materials	fireproof ABS hosing
Weight	0.39KG

What's the features of our Waterproof Home Alarm Warning Siren Horn Speaker?

1.Wired alarm electric siren

2.115db volume

3.Suitable for fire alarm and home alarm

4.Fireproof ABS housing

5.2 years warranty , welcome OEM

Product Display

IN-KIND SHOOTING

APPLICATION

Electric siren
EB-165

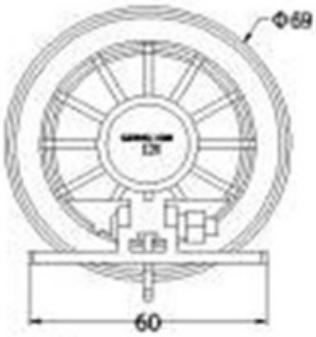
Φ69
60

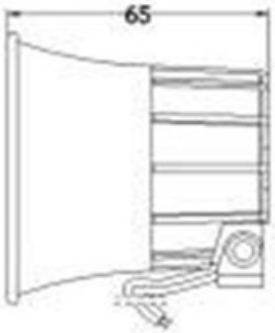
65

SHOW CASES

OFFICE SHOW

CUSTOMERS

EXHIBITION

CERTIFICATION

HOW TO COOPERATE

PACKAGING & SHIPPING

Detection+Packing+Sealing+Fnishing+International Express

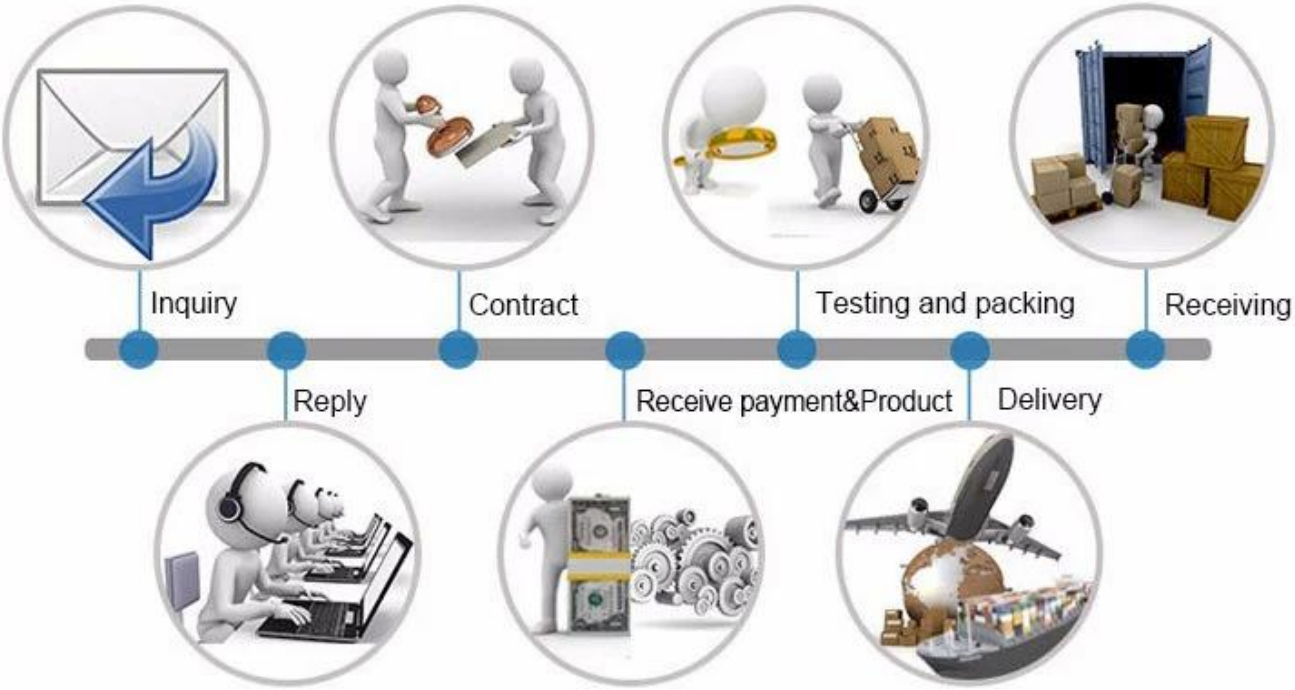

FAQ

Q:Can I have a sample order?

A:Yes, we are willing to offer trial sample order to you for quality test. Mixed samples are acceptable.

Q:What is the lead time?

A:Sample needs 1-3 working days, mass production time needs 10-15 working days.

Q:What is your MOQ?

A:No MOQ limit.The more quantity the more discounts.

Q:How do you ship the goods and how long does it take arrive?

A:The sample will be sent to you by optional shipping service (couriers, air, and sea),or appointed by buyer,7-15 days.

Q:How will we proceed the order if I have logo to print?

A:Firstly, we will prepare artwork for visual confirmation. If the color and position are right, we would make sampling firstly from silk print factory and take picture for your second confirmation before mass production.

How to contact us?
Click the enter send us inquiry below.