# Waterproof shutter door magnetic contact sensor with bracket

## EB-137B'S MAIN PARAMETER

| | |
|---|---|
| **Product Name:** | Waterproof shutter door magnetic contact sensor with bracket |
| **Model number:** | EB-137B |
| **Working voltage:** | Max DC 100 |
| **Working current:** | Max 0.5A |
| **Power consumption:** | 10W |
| **Interface port:** | NC/COM |
| **Induction gap:** | 20~30mm |
| **Size:** | Reed part:106*38*10(mm)<br>Magnet part:106*16*16(mm)<br>Bracket part:106*48*48(mm) |
| **Feature:** | **Shutter door usage, with bracket** |
| **Suitable for:** | **All kinds of door access control system and burglar alarm system** |
| **Material:** | ABS housing+ PCB board+Reed switch |
| **Housing color:** | Silver |
| **Weight:** | 1 pairs per bag, per bag weight 280g |

| | |
|---|---|
| **Warranty:** | 2 years warranty |
| **OEM:** | Welcome OEM |

## EB-137B'S FEATURE SHOW

# Waterproof

# Size

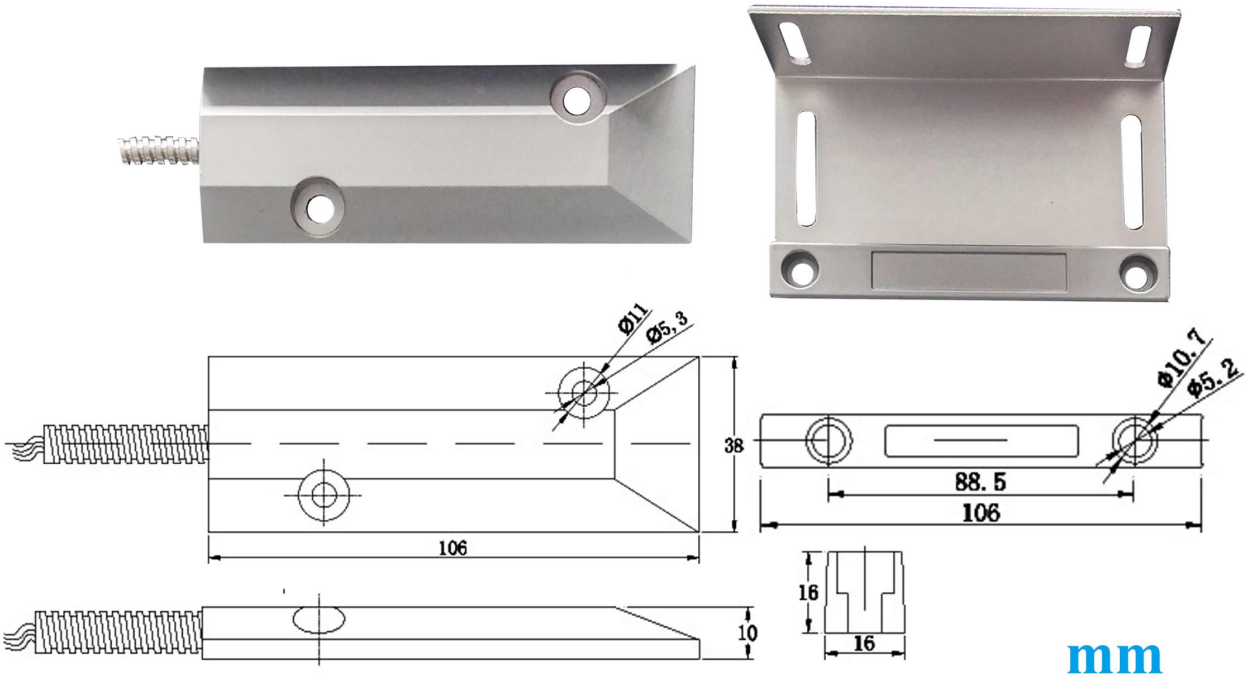

# NC mode working principle

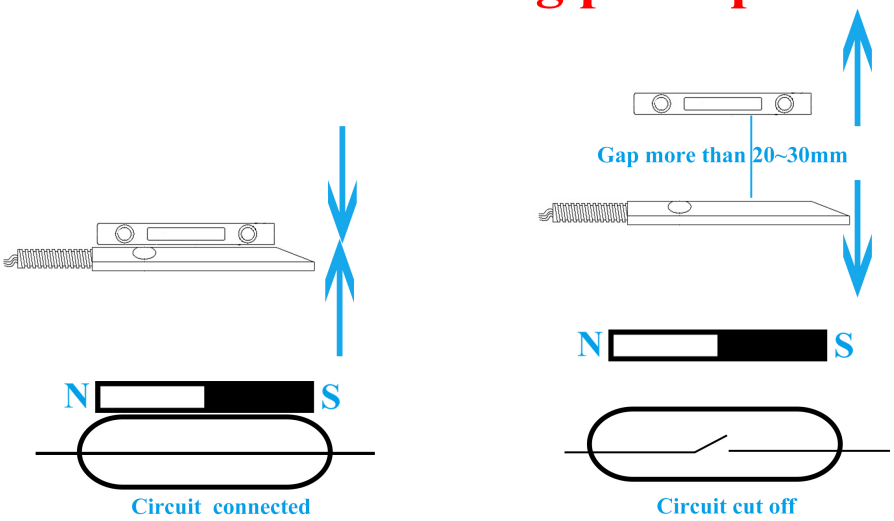


# Installation

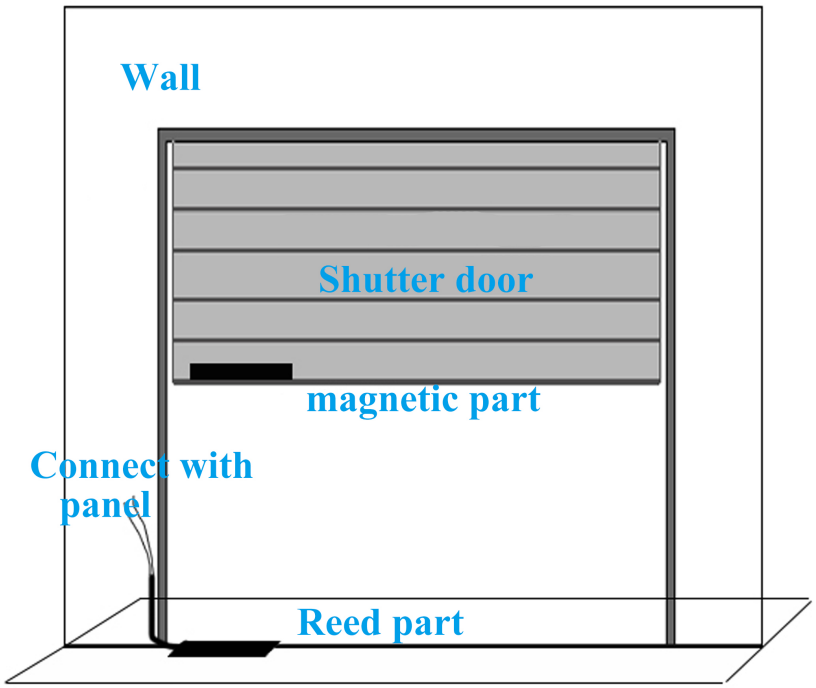


# Packaging

1pairs per bag

# HOW ABOUT OTHER CHOICE?