2020 SMQT [illegible] RFID 125Khz / 13.56Mhz [illegible]

[illegible] MQ-803

[illegible]:	2020 SMQT [illegible] RFID 125Khz / 13.56Mhz [illegible]	
[illegible]:	**MQ-803C**	**MQ-803D**
[illegible] RFID:	**IC (13.56 Mhz)**	**ID (125KHz [illegible])**
[illegible]:	0 ~ 3cm	
[illegible]:	1000	
[illegible]:	DC 12V	
[illegible]:	≤200mA	
[illegible]:	≤150mA	
[illegible]:	0 ~ 99s ([illegible])	
[illegible]:	-10 ℃ ~ 50 ℃	
[illegible]:	20% ~ 80%	
[illegible]:	-20 ℃ ~ 60 ℃	
[illegible]:	103.5 × 86 × 19mm	
[illegible]:	[illegible]	
[illegible]:	0.15kg	

□□□□□□□□□□□□□ MQ-803 □□□□□□□□□□□?

Size

Appearance

Wires port

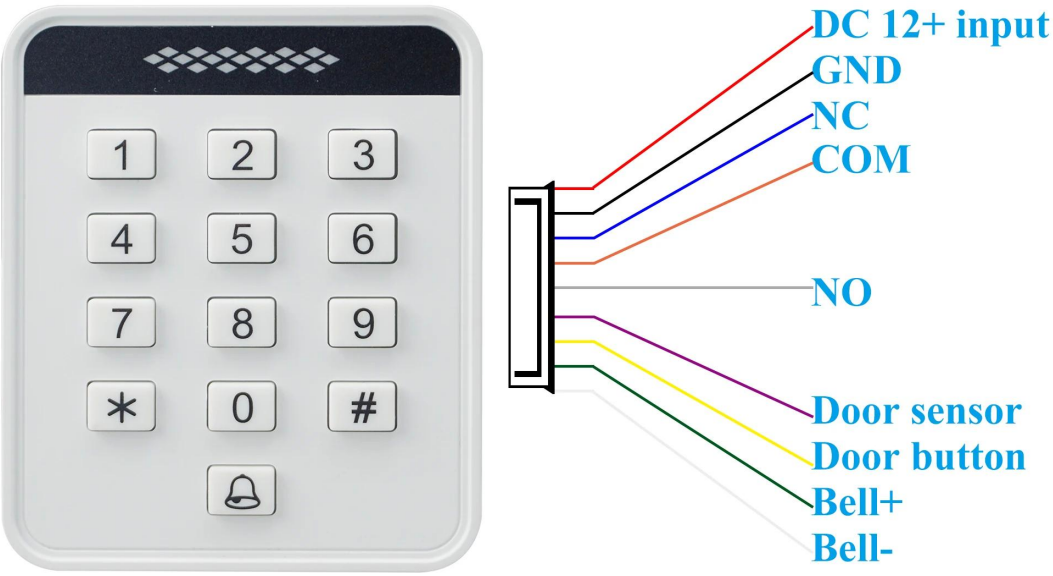

Wire diagram

Wiring way A:

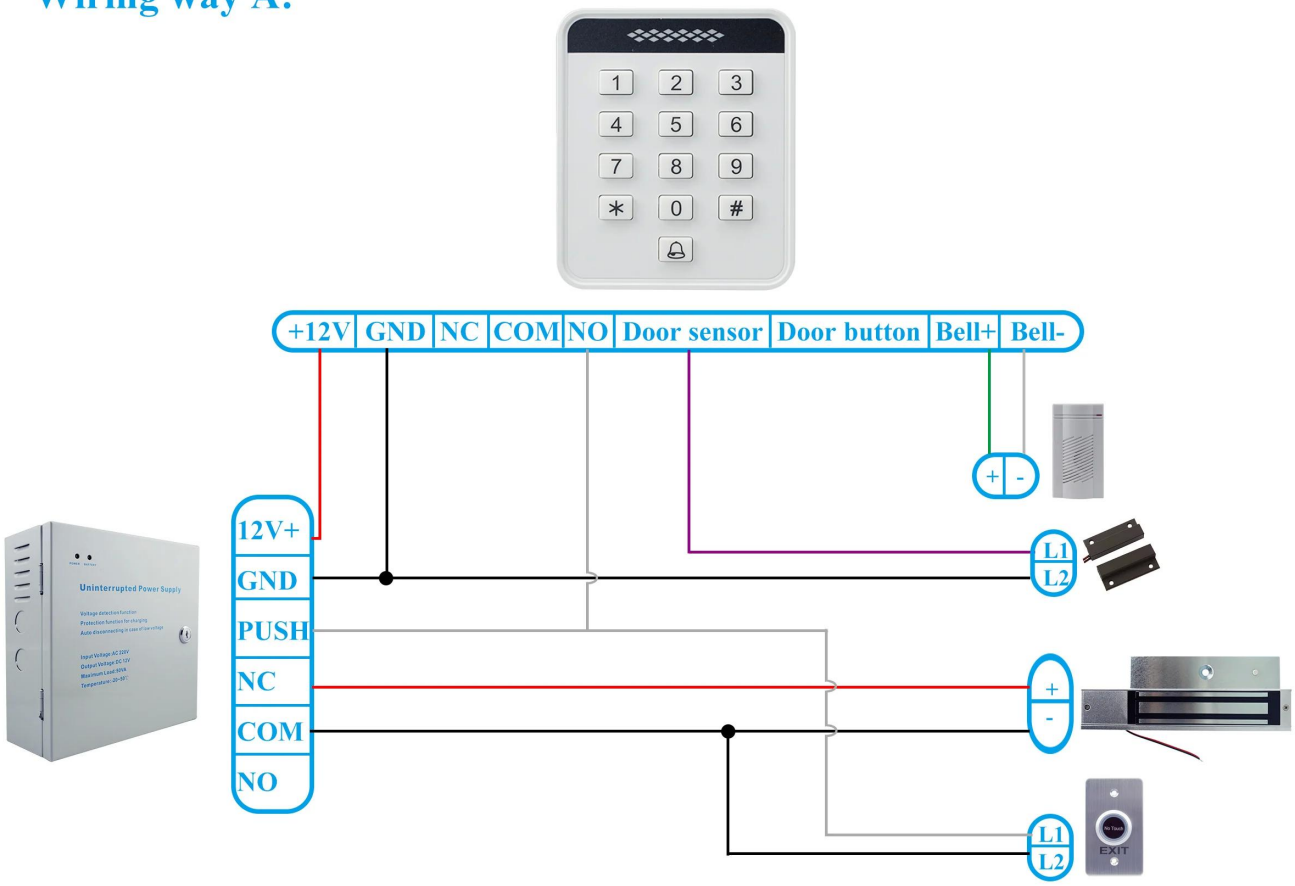

Wiring way B:

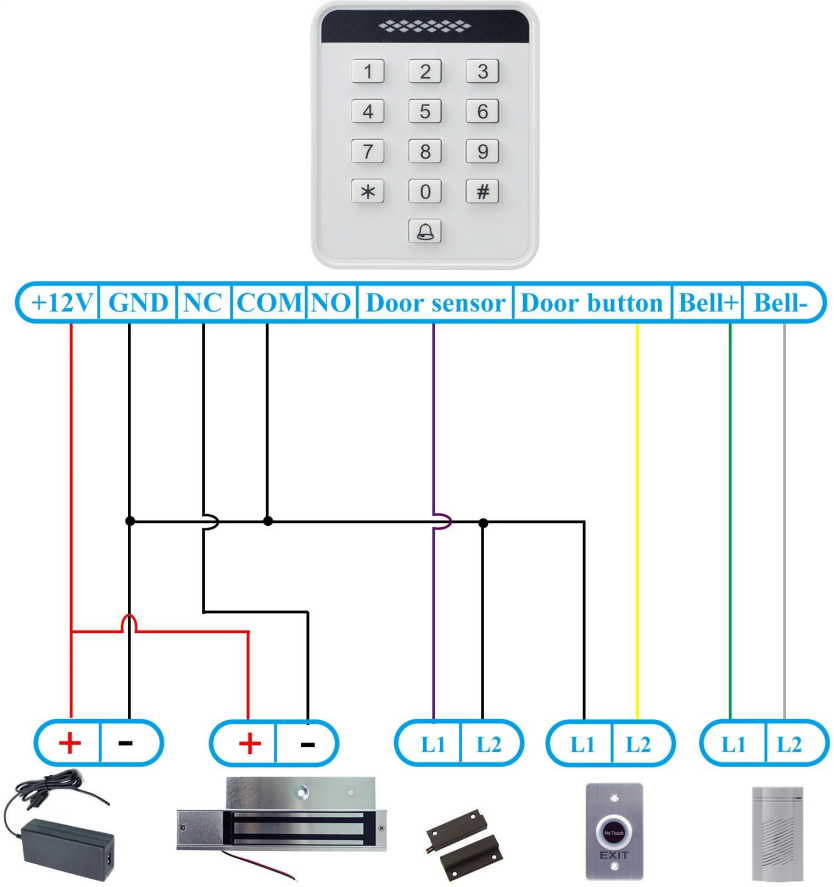
1 2 3
4 5 6
7 8 9
* 0 #
+12V
GND
NC
COM
NO
Door sensor
Door button
Bell+
Bell-
+
-
+
-
L1
L2
L1
L2
L1
L2
EXIT

□□□□□□□□□□□□□ □ ?

1 2
3 4
5 6
7 8
9 0
* #
1 2 3
4 5 6
7 8 9
0 #
CARD
Welcome
17:19
1 2 3
4 5 6
7 8 9
* 0 #