SMQT □□□□□□□□ TFT 3 □□□□□□□□

menu
F1
F2
F3
F4
F5
F6
F7
F8
OK
ESC
1
abc 2
def 3
ESC
M
ghi 4
jkl 5
mno 6
OK
pqrs 7
tuv 8
wxyz 9
0

1.Fingerprint & card time attendance and access control machine

2.3 inch colorful display screen

3.Capacity:80,000 records, 3000 cards,3000 fingerprints

4.With WG output/input port(WG26/34 adjustable)

5.Multiple system languages(adjustable)

6.TCP/IP,RS485,USB, U disk communication

7.Free PC time attendance management software

8.2 years warranty , welcome OEM

EA-908 ดูเป็นอย่างไร ?

F1
F2
F3
F4
F5
F6
F7
F8
1
ESC
M
OK
0

TCP/IP
USB

F1
F2
F3
F4
F5
F6
F7
F8
1
ESC
M
OK
0

F1
F2
F3
F4
F5
F6
F7
F8
1
ESC
M
OK
0

2018013000002
ZT8890TUM

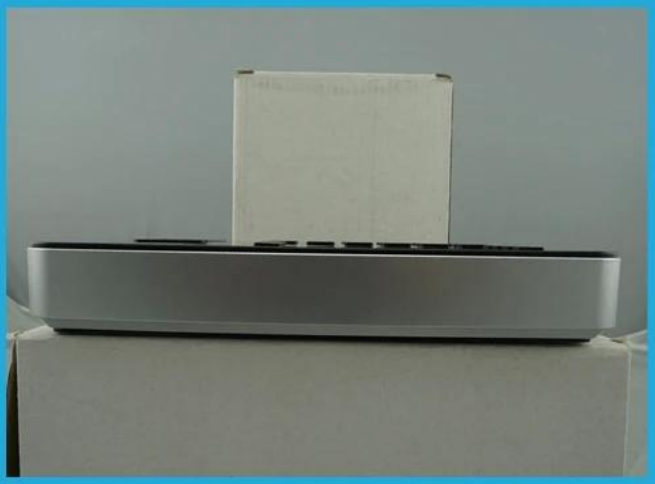

F1
F2
F3
F4
F5
F6
F7
F8
1
ESC
M
OK
0

วิธีการเกี่ยวกับแพ็คเก็จ **STANDARD** ของ **EA-908?**

高性能彩屏指纹考勤机
HIGH PERFORMANCE COLOR SCREEN
FINGERPRINT TIME ATTENDANCE
内外兼修 性能卓越
2.8寸彩屏
指纹识别
U盘数据下载
T9输入法
专业考勤报表

วิธีการใช้ไอที **?**

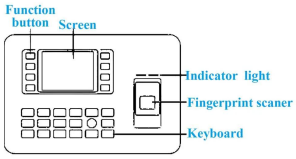

Front

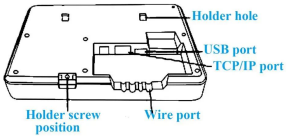

Bottom

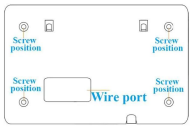

Back

Side

Configuration Diagram

Wiring Diagram

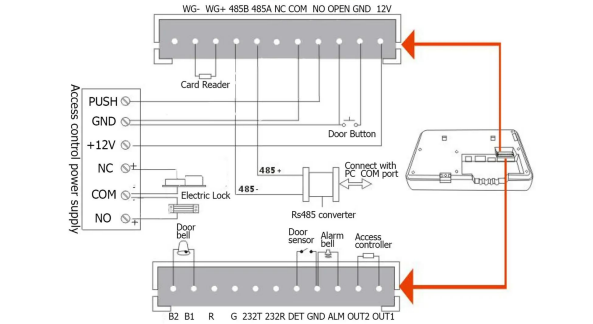

Lock

Card reader

Power supply

Door button

Alarm siren

Door sensor

Door bell

Time attendance& Access control

Widely used in a variety of time attendance and access control places, such as offices, workshops, supermarkets, laboratories, schools, factories and so on.

วิธีการเลือกอื่น ๆ

OFFICE SHOW

SMQT
深圳市铭汗科技有限公司

□□□□□□

SMQT
深圳市铭汗科技有限公司

SMQT 铭汗科技
专业门禁定制商

□□□□□□□□□□

2011 Brazil Fair
2012 shen yang Fair
2013 Jinan Fair
2013 Shenzhen Fair
2017 Shenzhen Fair
2012 shen yang Fair
2013 shen yang Fair
2013 Shenzhen Fair
2015 Shenzhen Fair

การรับรอง

Certificate of Compliance

CE

Certificate of Compliance

RoHS

Certificate of Compliance

CE

Certificate of Compliance

RoHS

Certificate of Compliance

CE

บรรจุภัณฑ์และจัดส่ง

VARIETY OF
PAYMENT OPTIONS
T/T
L/C
30/70
AT SIGHT/90DAY
WESTERN UNION WU
moving money for better
PayPal
VISA
MasterCard
DISCOVER

□□□□□□□□□□□□□□□□

**□□□: □□□□□□□□□□□□□□□□

**□□□: □□□□