[illegible]

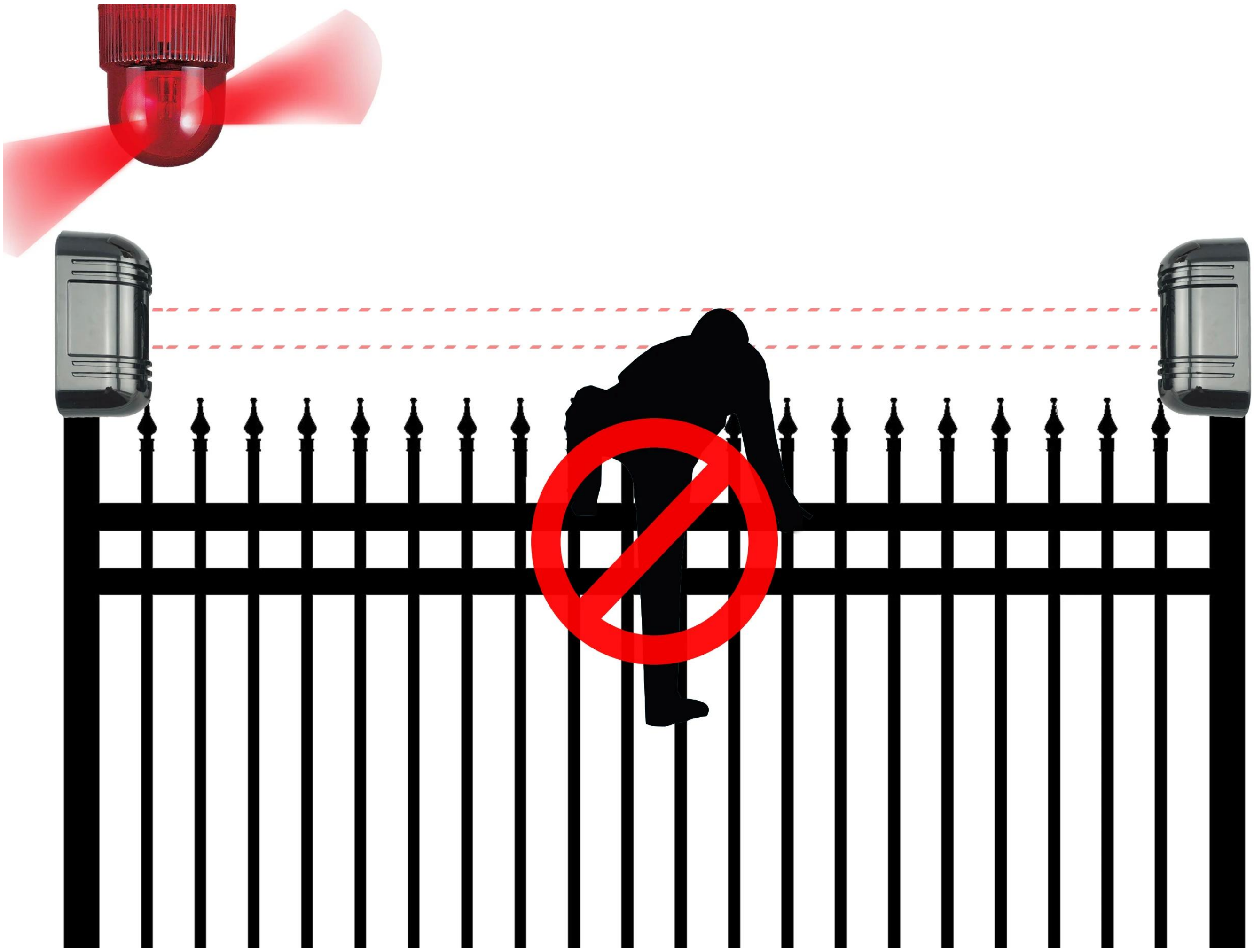

[illegible] ABT

[illegible]	[illegible] infared
[illegible]	ABT-30 ABT-60 ABT-100 ABT-150
[illegible]	30m 60m 100m 150m ([illegible]) ([illegible])
[illegible]	60m 120m 200m 3000m 300m ([illegible])
[illegible]	13.8-24VDC 11-18VAC
[illegible]	40-65mA
[illegible]	50-700m / [illegible]
[illegible]	-20 ° C- 50 ° c
[illegible]	NO / NC
[illegible]	[illegible]
[illegible]	180 ° (± 90 °)
[illegible]	± 10 °
[illegible]	[illegible]

1\. [illegible]

[illegible]

2.

[illegible] ([illegible] AGC) [illegible]

3. [illegible] / [illegible]

4.

[illegible]

5. [illegible]

6. [illegible], [illegible].

POWER
TRANSMITTER
ACTIVE INFRARED SENSOR
Transmit

GOOD
LEVEL
ALARM
RECEIVER
ACTIVE INFRARED SENSOR
Receive

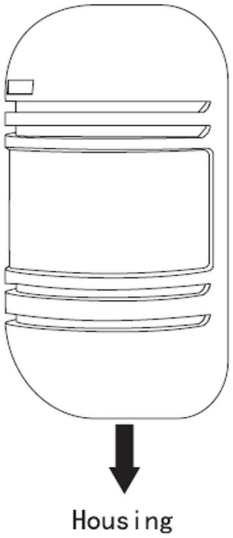
Housing

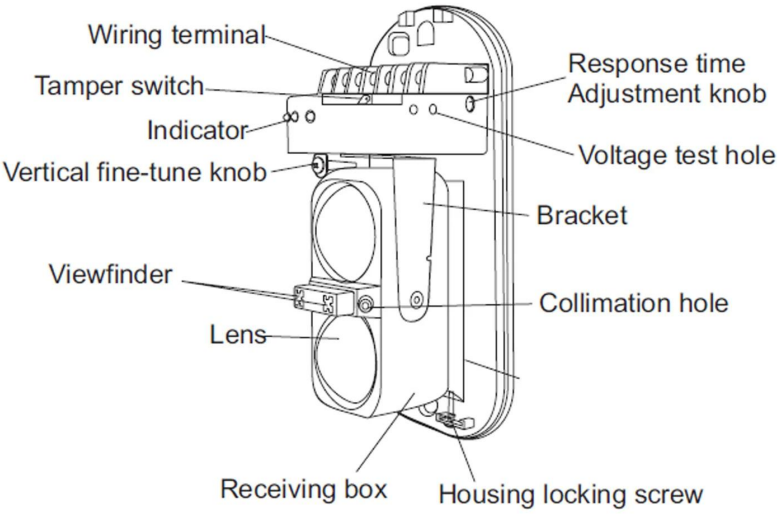
Wiring terminal
Tamper switch
Indicator
Vertical fine-tune knob
Viewfinder
Lens
Receiving box
Housing locking screw
Response time
Adjustment knob
Voltage test hole
Bracket
Collimation hole

POWER
TRANSMITTER
ACTIVE IN FRARED SENSOR

GOOD
LEVEL
ALARM
RECEIVER
ACTIVE IN FRARED SENSOR

Perimeter Wall
Protection
ABT
2 beams detector

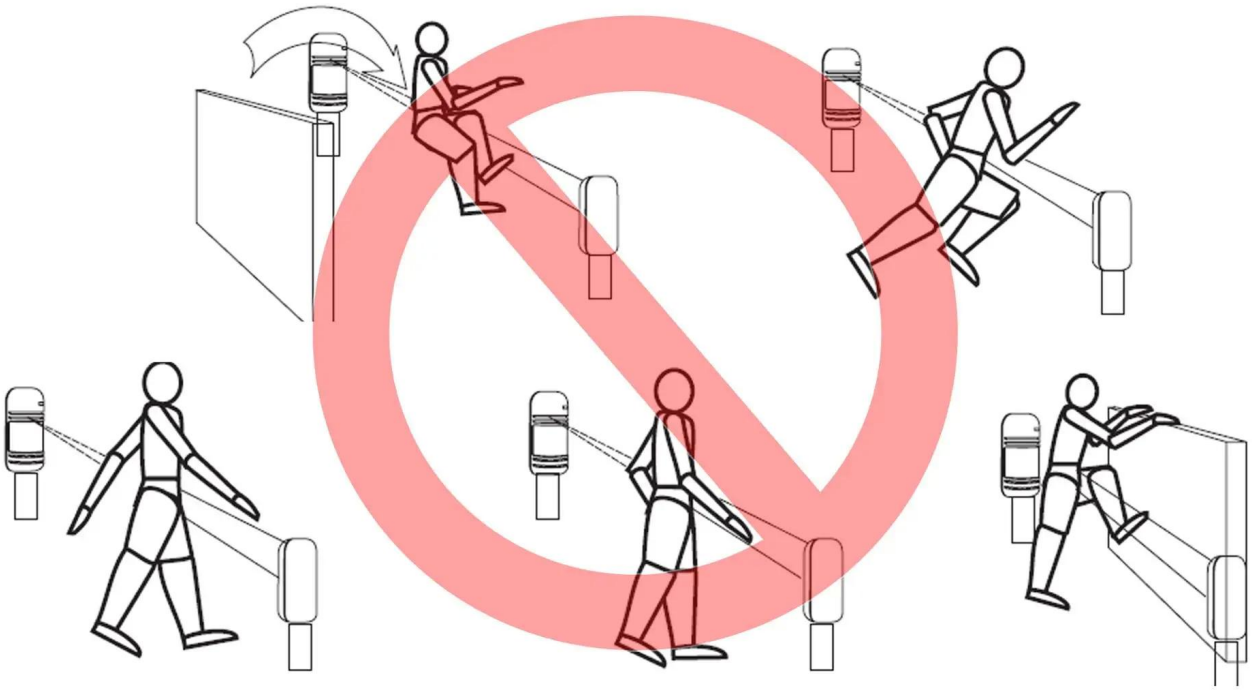

ACTIVE INFRARED SENSOR
Transmit

ACTIVE INFRARED SENSOR
Receive

ABT-30
POWER
ACTIVE INFRARED SEN
Transmit

ACTIVE INFRARED SENS

ABT-30
POWER
ACTIVE INFRARED SEN
Transmit

1 2 3 4 5 6 7
POWER
FREE
AMC-219-48
6 7
TAMPER

□□□□□□□□□□□□□□□□□□□□□□□□□□ □

SMQT
铭汗科技

SMQT
铭汗科技

SMQT
铭汗科技

SMQT
铭汗科技