Parameter

SMQT

□□□□□□□□□□	90L * * * * * * * * 65W 25.5H (mm)
□□□□□□□□□□□□□□□□□□	DC9V
□□□□□□□□□□□□□□□	□□□□□□□□□□□□□□□□□□□□□□□□□□□□□□□□□□ EIA / TIA RS-232C, RS-485 / RS-422 □□□□□□□□
□□□□□□□□□□□□□□□□□□□	RS-232C □□□□□□□□□□□□ DB9 □□□□□□□□□□□□□□□□□□□□□ RS-422 / RS-485 DB9 □□□□□□□□□□□□□□□□□□□□

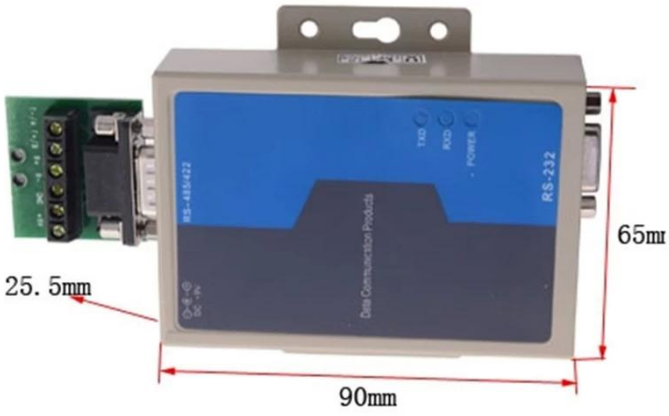

Installations

SMQT

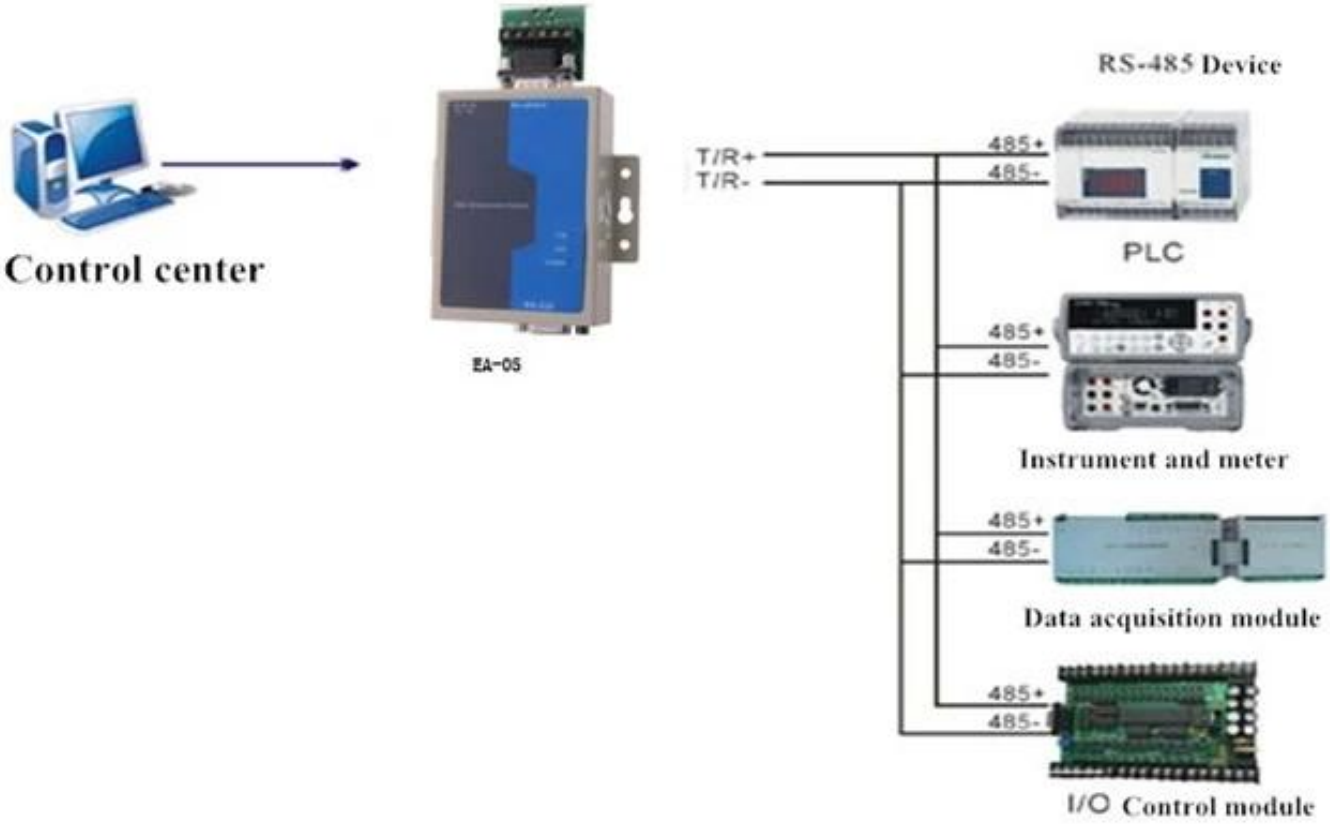

Packing list

SMQT

□□□□□□□□□□□□□□□□□□□□	
□□□□□	20 □□□□ / □□□□□
□□□□□□□□□□□□□□□□□□□□	42.8L * * * * * * * * 29.8H 36.6W (□□.)
□□□□□□□□□□□□□	13.22Kg

Office

SMQT

Exhibitions

SMQT

2011 Brazil Fair
2012 Shenyang Fair
2013 Jinan Fair
2013 Shenzhen Fair
共赢
.....
2012 Shenyang Fair
2013 Shenyang Fair
2013 Shenzhen Fair
2015 Shenzhen Fair