Parameter

[illegible]	DC12V
[illegible]	15W
[illegible]	[illegible] ABS
[illegible]	800HZ ~ 15kHz
SNR	≥82db
[illegible]	150db
[illegible]	-10 ℃ ~ 65 ℃
[illegible]	40% [illegible] 95%

Introduction

[illegible] DB siren.This 12 [illegible]

[illegible] ABS, [illegible]

Built-in [illegible];

[illegible], [illegible];

[illegible]: [illegible], [illegible]

[illegible] 115db [illegible] Smail [illegible] antif

Dimesion Picture

Installations

SMQT

SMQT®

Installtion Demo:

Accessories:

Features

SMQT®

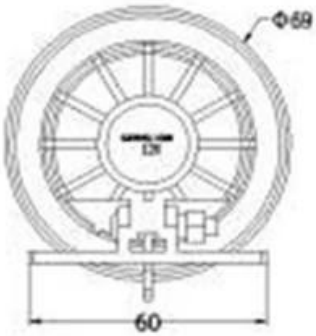

Office

SMQT

Exhibitions

SMQT