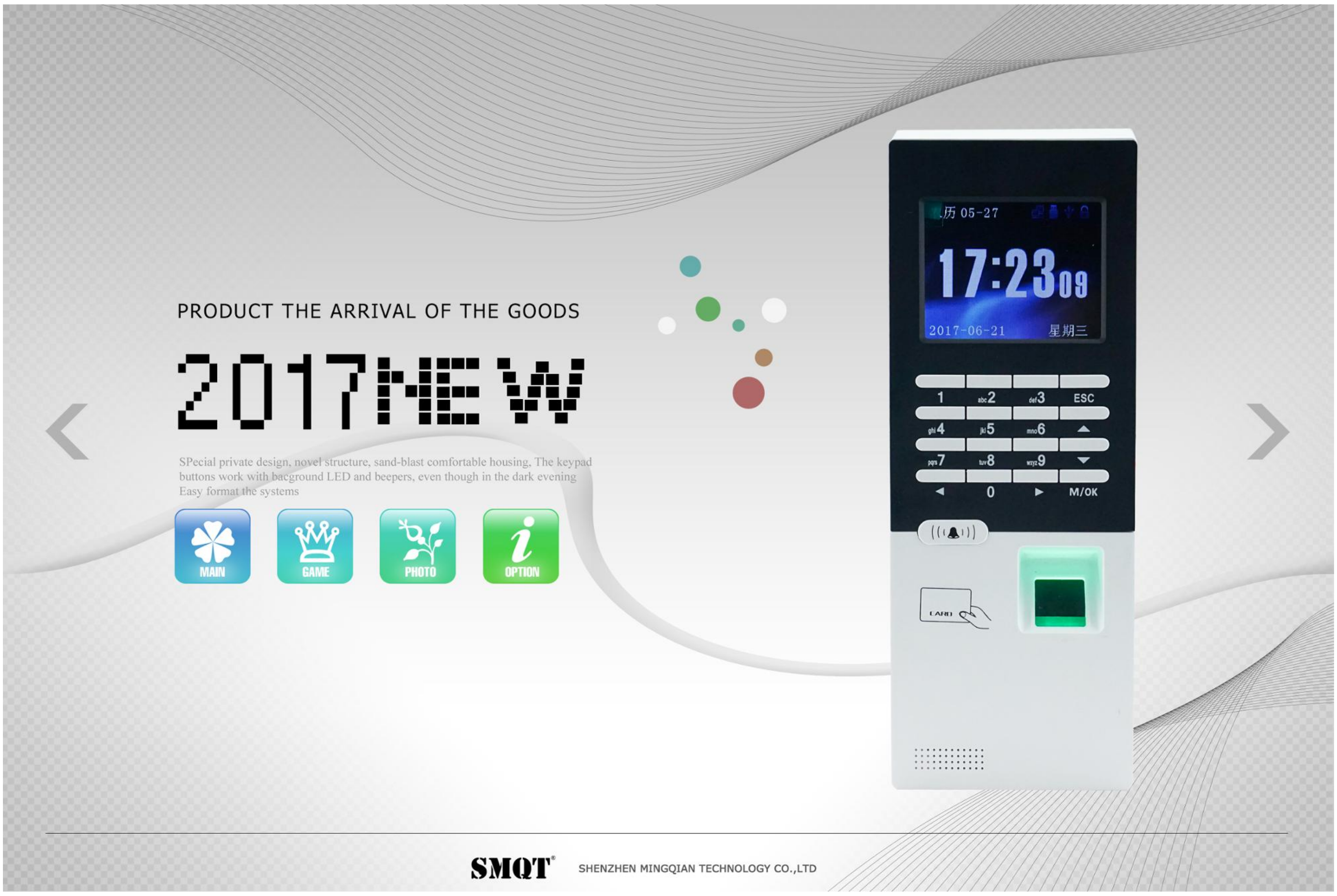

□□□□:	□□		
□□□□□□□□□□□:	EA-904	CPU:	400MHz
□□□□□□□□□□□□□□:	□□□□□□□□	□□□□□□□□□□□□□□:	□□□□□□□□ 10.93 quard Core
□□□□□□ LCD:	□□□□□□□□ TFT □□□□ 2.8 □□□□	□□□□□□□□□□□□□□□□□□□:	0.6sec
□□□□□□□□□□□□□□□□□:	3000 (10000/30000/50000 □□□□□□□□□□)	□□□□□□□□□□□□□:	80000/120000/300000
□□□□□□□□□□□□□□□□□:	RS485, TCP / IP, USB, □□□□□□□□ USB	□□□□□□□□□□□□□:	□□□□□□□□□□, □□□□ RFID, □□□□□□□□□
□□□□:	□□□□□□□, □□□ □□□	□□□□:	220mm * 80mm * 26mm
□□□□□□□□□□□□□□□□□□□□□□:	5VDC	□□□□□□□□□□□□□□□□□□□□□□□□□:	□□□□□□□□□□, □□□□□□□□□, □□□□□
□□□□:	175mm * 120mm * 30mm	□□□□□□□□□□□□:	1000 □□□□□□□□□□□□□□□□□□□ +1000

□□□?

Wiring diagram(accesss control):

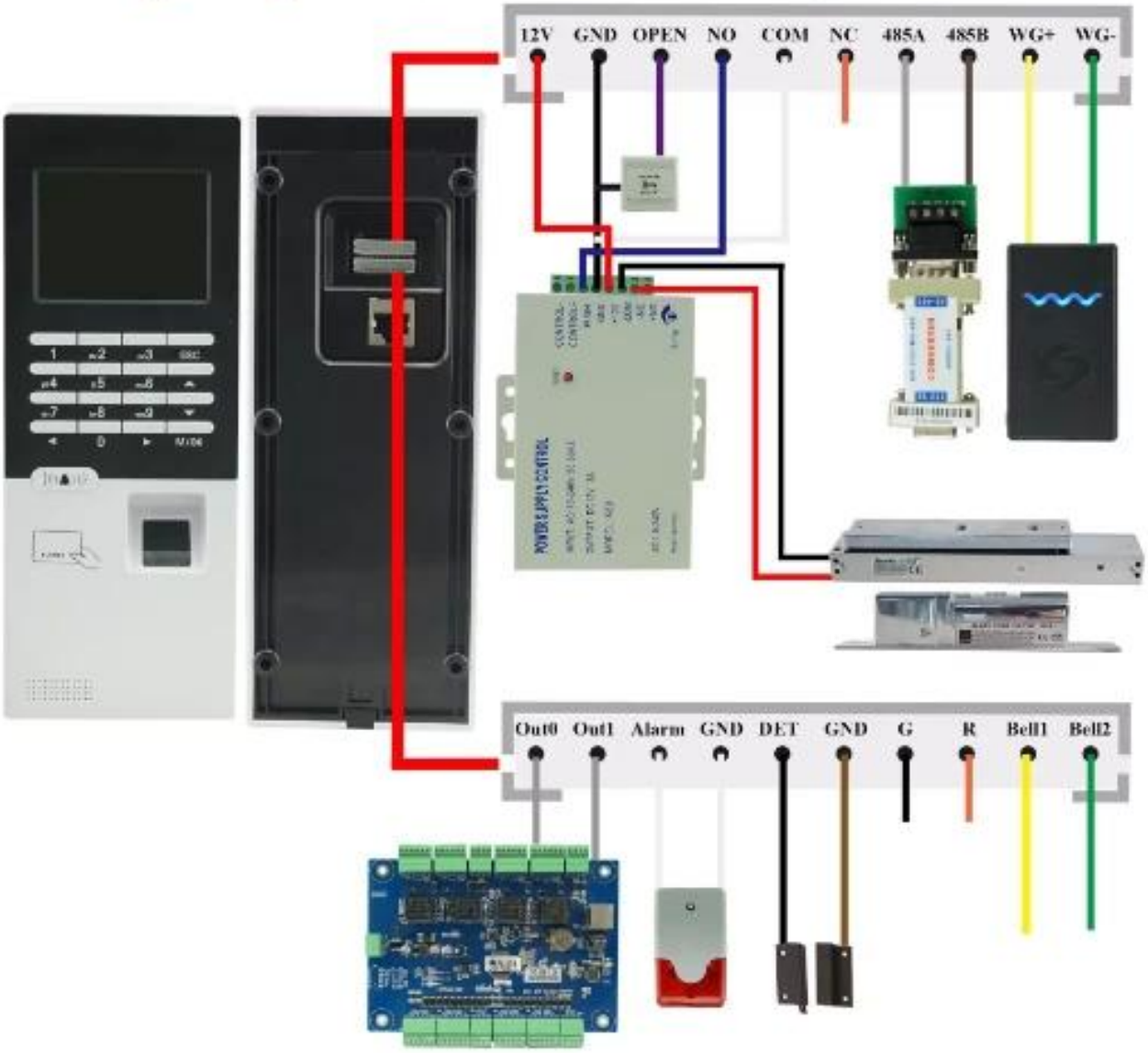

□□□□□□□□□□ IN-KIND

Reset

SHOW CASE

OFFICE SHOW

SMQT
深圳市铭汗科技有限公司

□□□□□□

SMQT
深圳市铭汗科技有限公司

SMQT
专业门禁定制商

□□□□□□□□□

□□□□□□□□□□□□□□

HOW TO COOPERATION

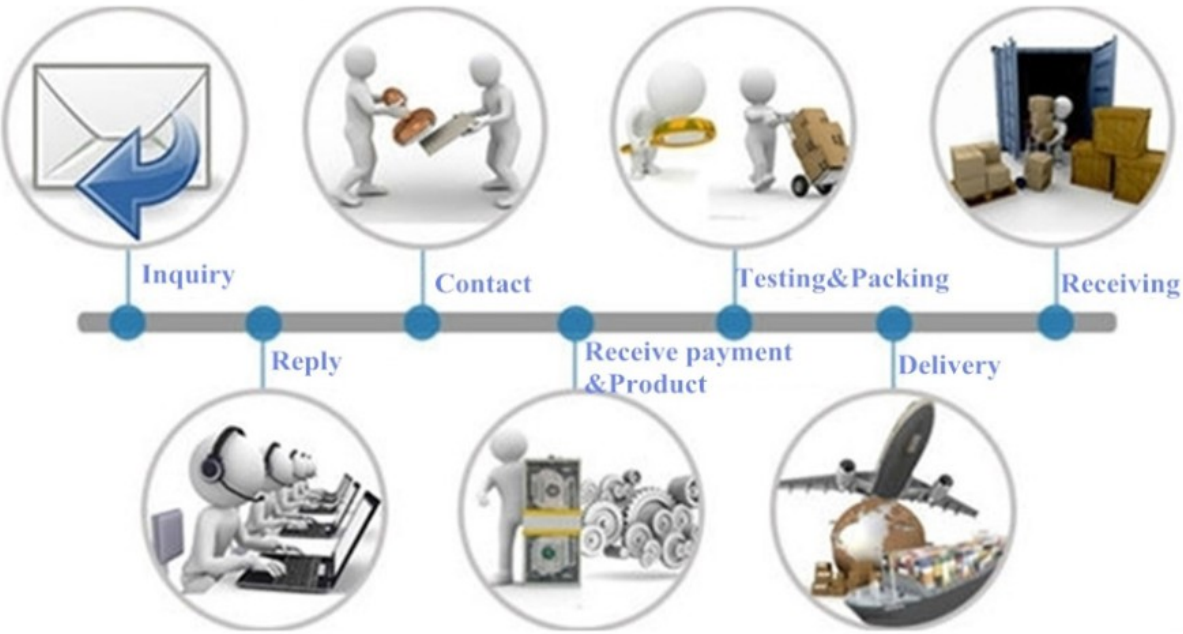

Trade terms:	**EXW**
Payment terms:	**T/T, Western union, Paypal etc**
Delivery time:	**Normal order within 7 days, bulk order 10-15days**
Packing:	**Neutral paper box and paper carton**
Shipping:	**Express company or by sea, by air or appointed by buyer**