Standalone Smoke Detector

□□□□	
□□□□□□□□□□□□□□□□:	□□□□□□□□□□□□□□□□

[illegible]?

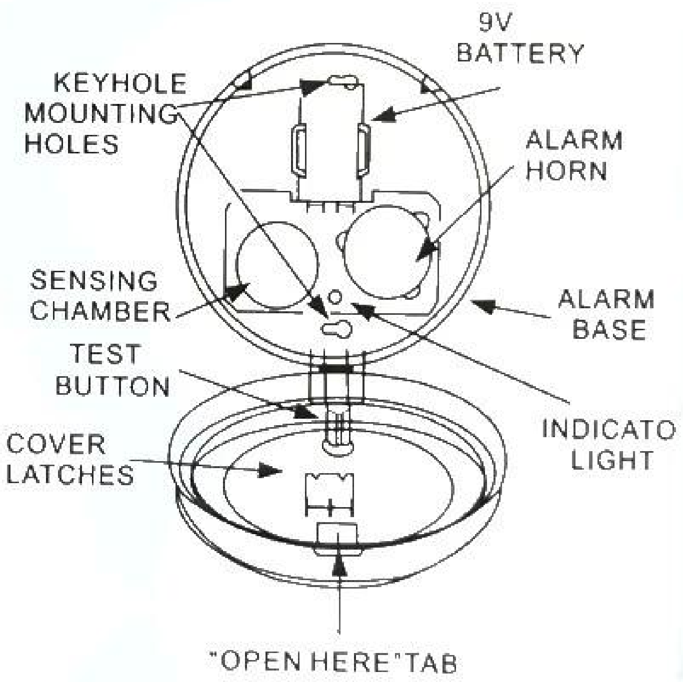

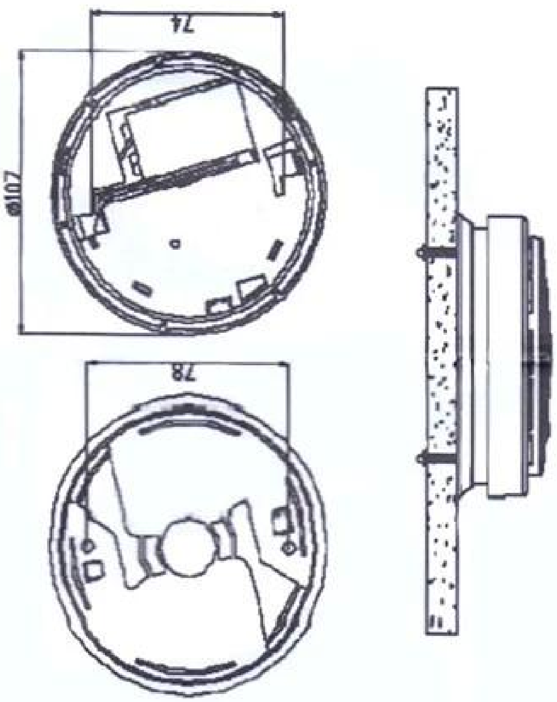

Suitable for home,office,factory,hotel,school,bank..etc.

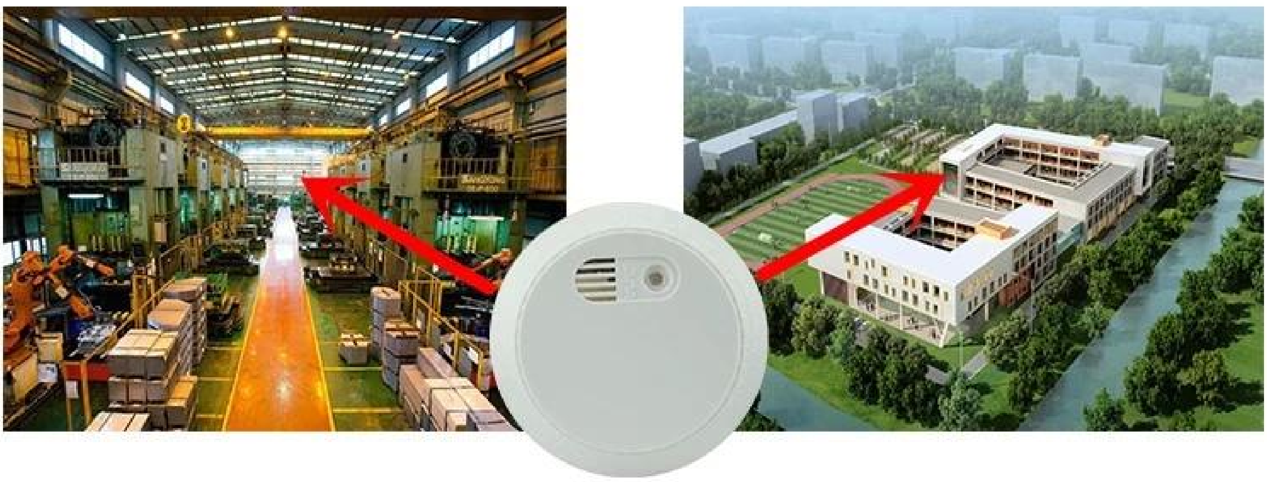

การยิงแบบ **IN-KIND**

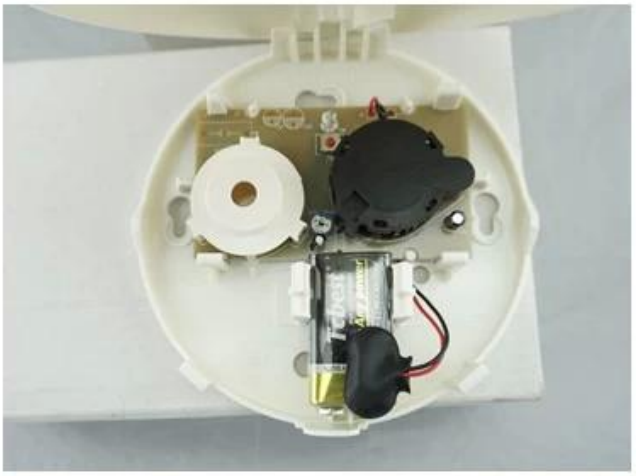

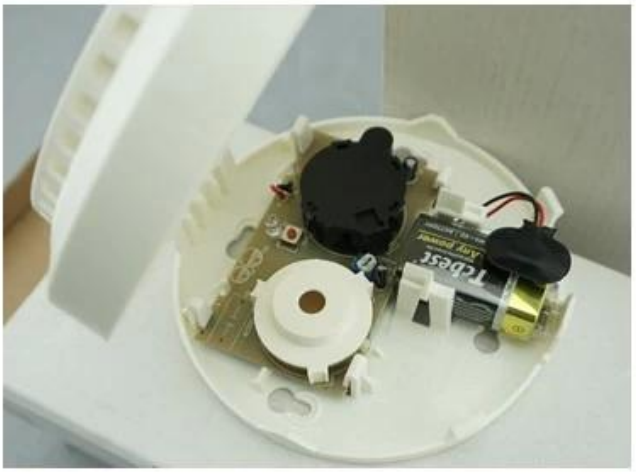

SHOW CASE

OFFICE SHOW

SMQT
深圳市铭汗科技有限公司

□□□□□□

SMQT
深圳市铭汗科技有限公司

SMQT
深圳市铭汗科技有限公司

深圳市铭汗科技有限公司

深圳市铭汗科技有限公司

□□□□□□□□□□

2011 Brazil Fair
2012 shen yang Fair
2013 Jinan Fair
2013 Shenzhen Fair
2012 shen yang Fair
2013 shen yang Fair
2013 Shenzhen Fair
2015 Shenzhen Fair
....

ประกาศนียบัตร

Certificate of Compliance

Certificate of Compliance

RoHS

Certificate of Compliance

Certificate of Compliance

RoHS

Certificate of Compliance

HOW TO COOPERATION

Trade terms:	**EXW**
Payment terms:	**T/T, Western union, Paypal etc**
Delivery time:	**Normal order within 7 days, bulk order 10-15days**
Packing:	**Neutral paper box and paper carton**
Shipping:	**Express company or by sea, by air or appointed by buyer**