[illegible] TCP / IP [illegible]

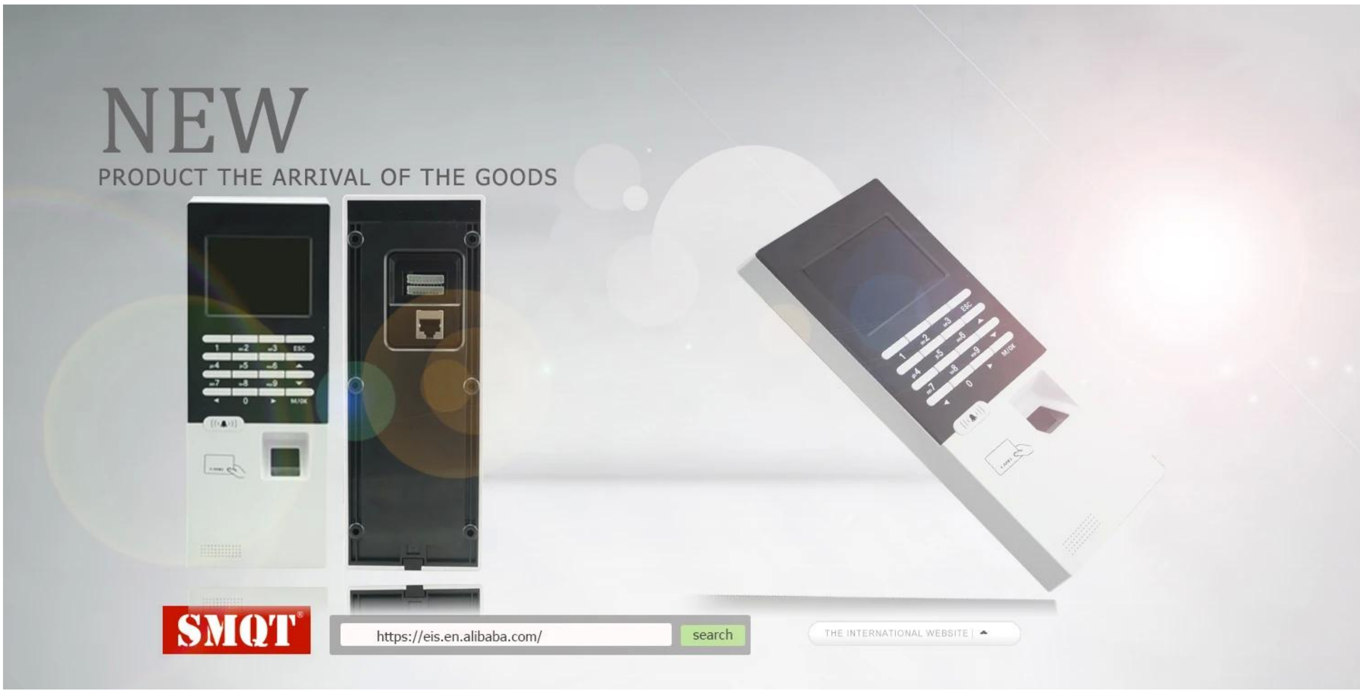

[illegible]:	[illegible] TCP / IP [illegible]
[illegible]:	EA-904
[illegible]:	219mm * 82mm * 27mm
[illegible]:	3000 [illegible]
[illegible]:	3000 [illegible]
[illegible]:	ID (125KHz [illegible])
[illegible]:	5 ~ 10cm
[illegible]:	[illegible] **RS485 / TCP / IP / USB / U**
[illegible]:	WG output
[illegible]:	12VDC
[illegible]:	& lt; 300mA
[illegible]:	-25 ~ 50degree
[illegible]:	White & [illegible]
[illegible]:	0.5 [illegible].[illegible].
OEM:	[illegible] OEM [illegible]
[illegible]:	2 [illegible]

[illegible] EA-904 [illegible]?

1.Fingerprint+Card access control & timeattendance reader.

2.3000 pcs fingerprint &card capacity,80000 pcs record capacity.

3.Fingerprint identification speed<0.6s.

4. Enghish/Chinese system language freely adjustable.

5.Access control & Time attendance fucntion.

6.RS485,TCP/IP,USB, U disk communication way.

7.Free PC time attendance software.

8.2 years warranty , welcome OEM.

EA-904 ดูคล้ายกับอะไร ?

ESC
M/OK
U-disk
Usb
Reset

□□□□□□□□□□□□□□□□□□□□□□□□□□□□□□ EA-904?

□□□□□□□□□□□□□□□□?

Front Side Back

Wiring diagram(accesss control):

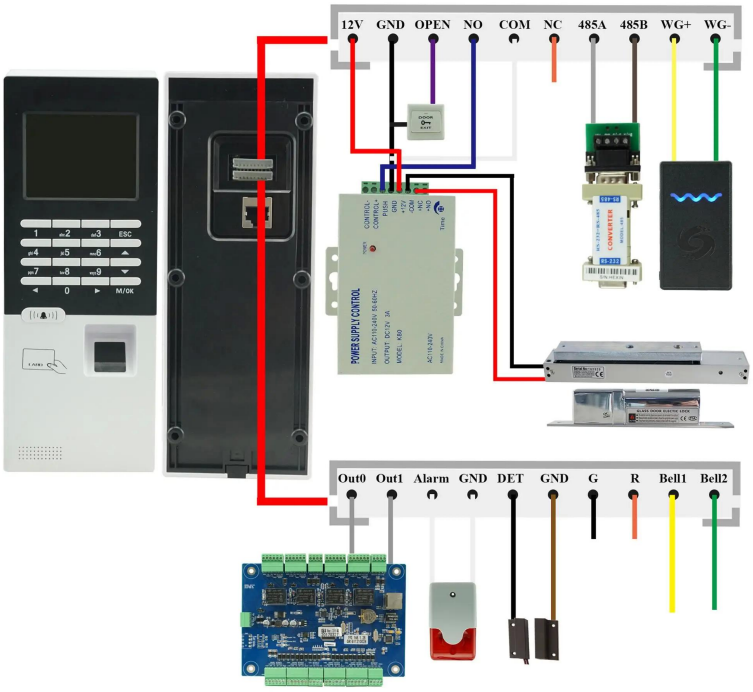

Access control &Time attendance

Apply to a variety of access control and time attendance sites, such as factories, offices, schools, supermarkets, and so on.

วิธีการเลือกอื่น ๆ

SMQT
铭汗科技

SMQT
铭汗科技

SMQT
铭汗科技

SMQT
铭汗科技

SMQT
铭汗科技

SMQT
铭汗科技

SMQT
铭汗科技

SMQT
铭汗科技

SMQT
铭汗科技

OFFICE SHOW

SMQT
深圳市铭汗科技有限公司

□□□□□□

SMQT
深圳市铭汗科技有限公司

SMQT 铭汗科技
专业门禁定制商

□□□□□□□□□□

2011 Brazil Fair
2012 shen yang Fair
2013 Jinan Fair
2013 Shenzhen Fair
2017 Shenzhen Fair
2012 shen yang Fair
2013 shen yang Fair
2013 Shenzhen Fair
2015 Shenzhen Fair

□□□□□□□□□□

Certificate of Compliance
Certificate of Compliance
Certificate of Compliance
Certificate of Compliance
Certificate of Compliance
RoHS
RoHS
CE
CE
CE

□□□□□□□□□□□□□□□□□□□□□□

VARIETY OF
PAYMENT OPTIONS
T/T
L/C
30/70
AT SIGHT/90DAY
WESTERN UNION WU
moving money for better
PayPal
VISA
MasterCard
DISCOVER

□□□□□□□□□□□□□□□□□

**□□□: □□□□□□□□□□□□□□□□□

[illegible]: [illegible]?

A:[illegible]