EB-853 16 Wired & 29 Wireless anti intruder Alarm Control Panel

Product Description

Specification	
Model	EB-853
Metal case dimension	256×236×69(mm)
Keypad size	159mm×138mm×33mm
Power supply	220V AC±10%/ 50Hz
Static current	≤50mA(when not charging)
Alarm current	≤200mA
Output power	12v~15vDC/≤1.5A
Siren output	12v ≤400mA
GSM Frequency	850/900/1800/1900Mhz
Wired and Wireless zones	16 wireless zones and 16 wired zones
Distance between Metalcase and wired keypad	≤30m
Working temperature	-10℃~+70℃
Working humidty	<97%

System Wireless Frequency	315Mhz/433Mhz(2262 coding chip)(optional)
Communicating format	ADMCO4+2,CID
Recording Time	10~20s
Material	Steel box and ABS Keypad
Wired Alarm Input	NO/NC

Product Feature

what features of our 16 Wired & 29 Wireless anti intruder Alarm Control Panel?

1.High speed digital communication, compatible ADEMCO4+2, CID digital communication protocol;Send alarm signal to alarm center.
2.GSM,fixed telephone,SMS,GPRS multiple alarm transmission mode.
3.Custom modify alarm message alarm content.
4.GSM,fixed telephone network to dial,you can customize which priority network.
5.Different programmable settings,such as alarm sounds, zone types, recording, monitoring, remote controlling,telephone number, phone line Check,and etc.
6.1 group 6 bits primary passwords,15 groups subsidiary setting passwords are available to improve security.
7.6 groups of phone number and 3 group alarm center phone number could be set.
8.9 ARM modes:SMS protection, exit ARM,boundary ARM,single zone ARM, delay ARM,remote ARM,compel ARM,remote ARM and preset time ARM.
9.The alarm dialing is in priority.
10."Watch dog" function, to avoid system down.

Product Display

IN-KIND SHOOTING

Application

APPLICATION

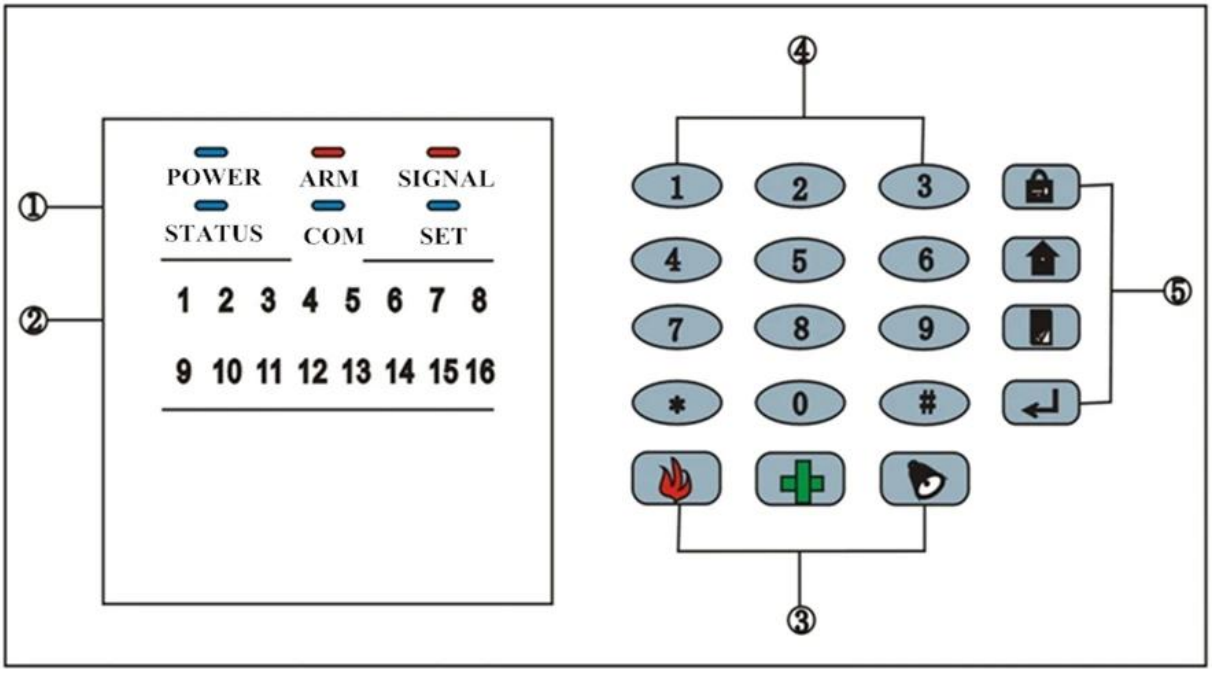

Parts Name:

①_ _Function Indicator Light ②_ _ARM Zone Light ③_ _Emergency Key

④_ _Number Key ⑤_ _Shortcut Key(ARM;Home ARM;Pause;Confirm)

System Wiring Diagram

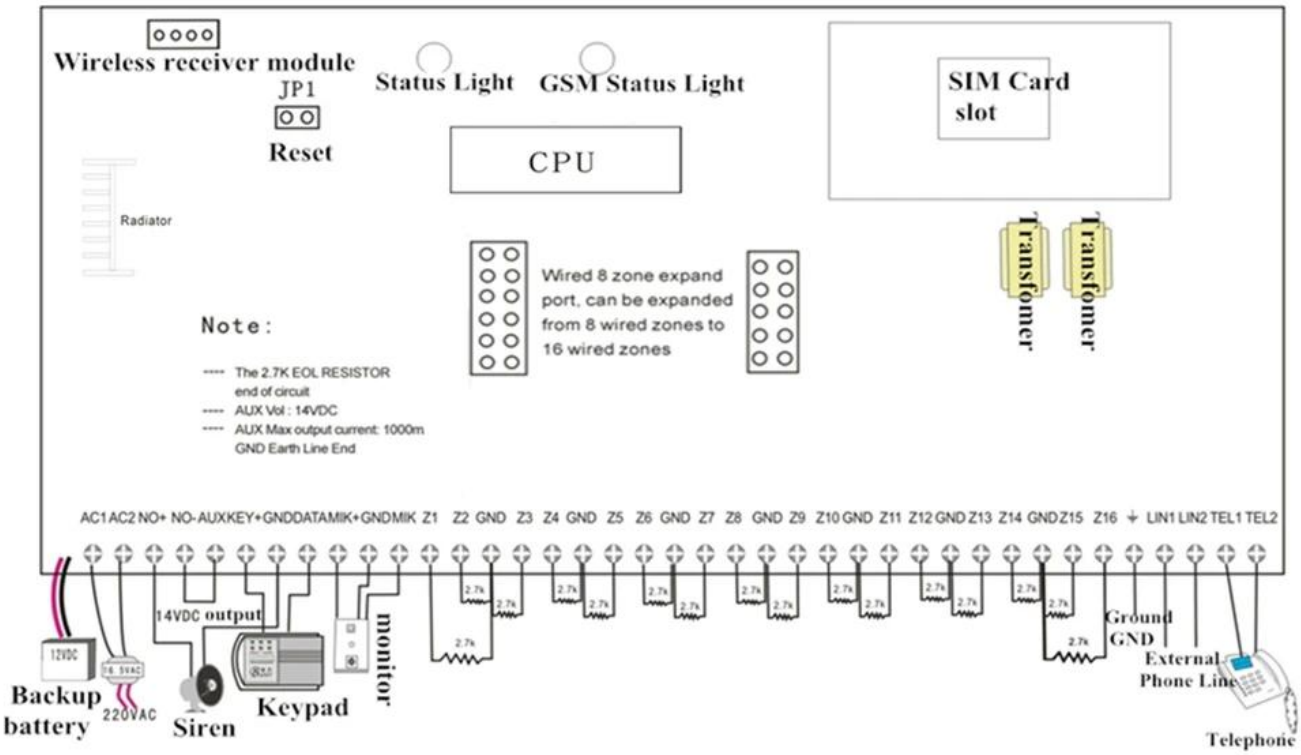

Show Cases

SHOW CASES

Company Information

OFFICE SHOW

CUSTOMERS

EXHIBITION

CERTIFICATION

Our Services

HOW TO COOPERATE

Trade terms:	EXW
Payment terms:	T/T, Western union, Paypal etc
Delivery time:	Normal order within 7 days, bulk order 10-15days
Packing:	Neutral paper box and paper carton
Shipping:	Express company or by sea, by air or appointed by buyer

FAQ

Q:Can I have a sample order?

A:Yes, we are willing to offer trial sample order to you for quality test. Mixed samples are acceptable.

Q:What is the lead time?

A:Sample needs 1-3 working days, mass production time needs 10-15 working days.

Q:What is your MOQ?

A:No MOQ limit.The more quantity the more discounts.

Q:How do you ship the goods and how long does it take arrive?

A:The sample will be sent to you by optional shipping service (couriers, air, and sea),or appointed by buyer,7-15 days.

Q:How will we proceed the order if I have logo to print?

A:Firstly, we will prepare artwork for visual confirmation. If the color and position are right, we would make sampling firstly from silk print factory and take picture for your second confirmation before mass production.

How to contact us?
Click the enter send us inquiry below.